DIGITAL DESIGNER 4.2

Model Name:
clock

Number of Bricks: **172**

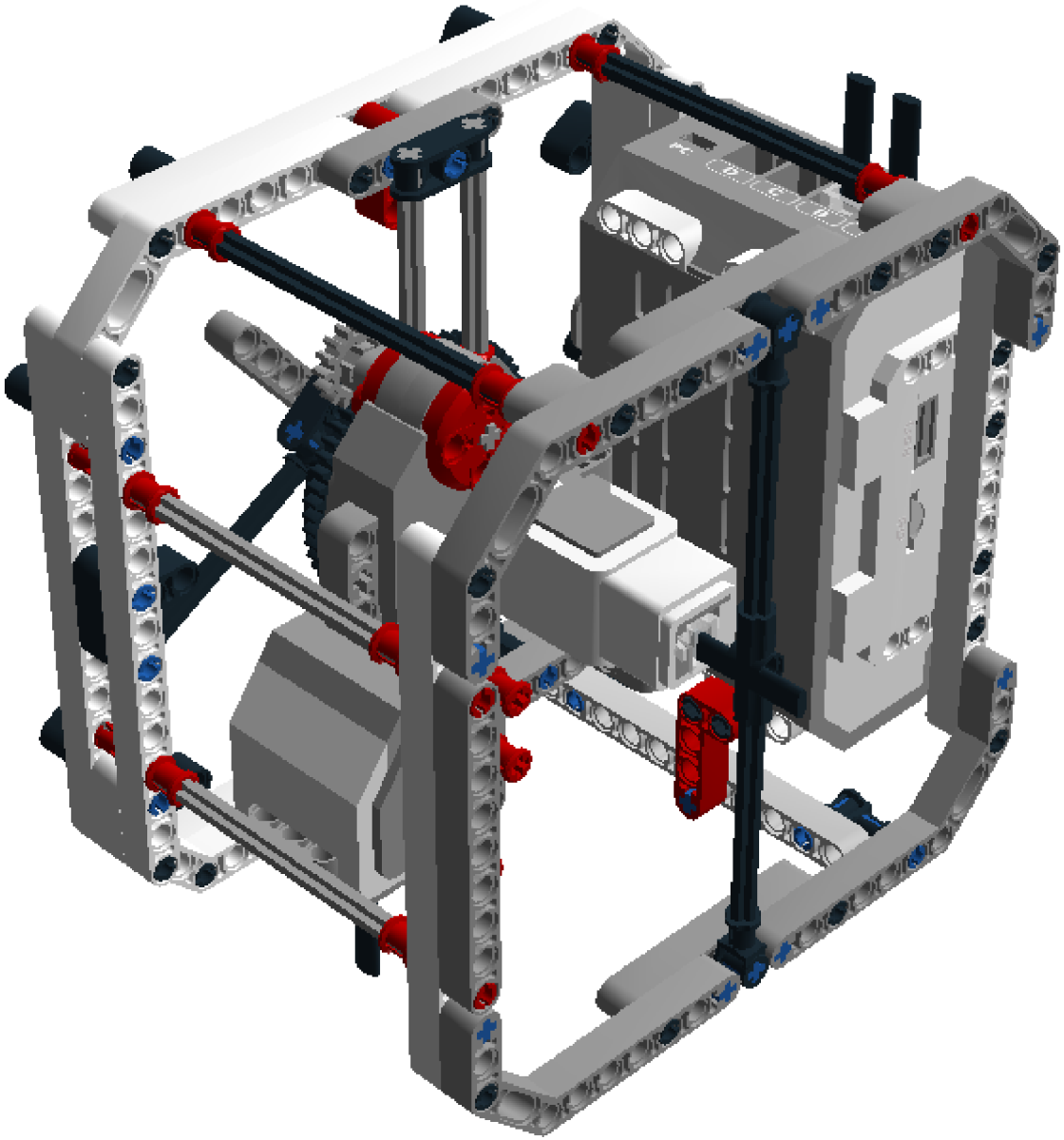

Step 1 of 78

1 x

1 x

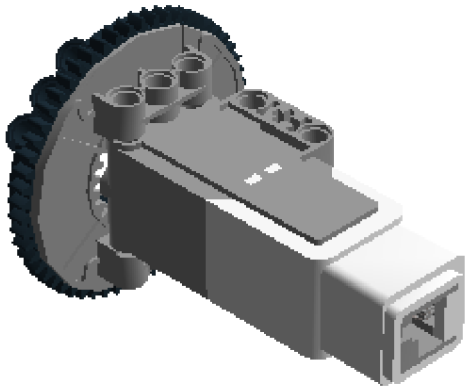

Step 2 of 78

1 x

1 x

1 x

1 x

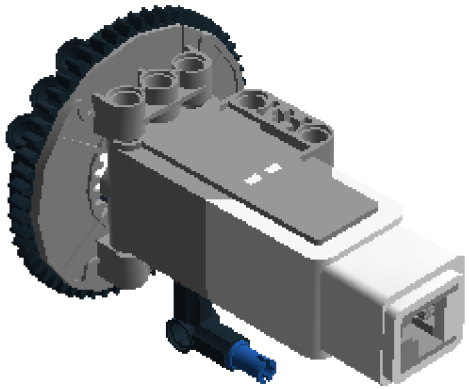

Step 4 of 78

1 x

1 x

1 x

1 x

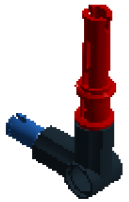

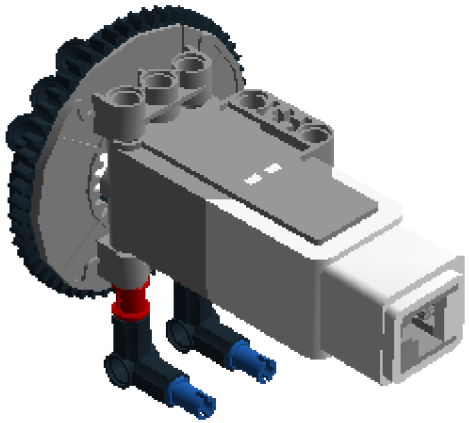

Step 6 of 78

1 x

1 x

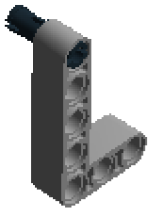

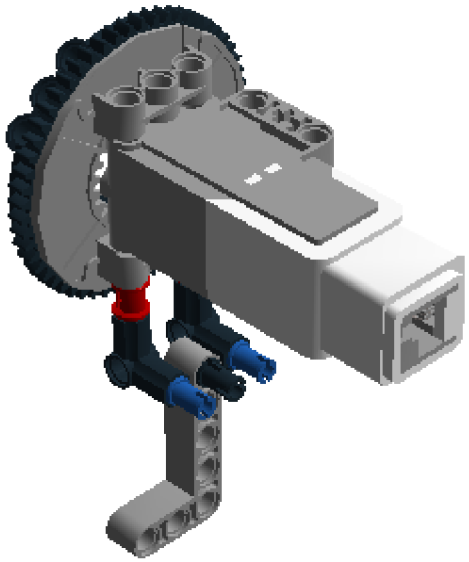

Step 8 of 78

1 x

1 x

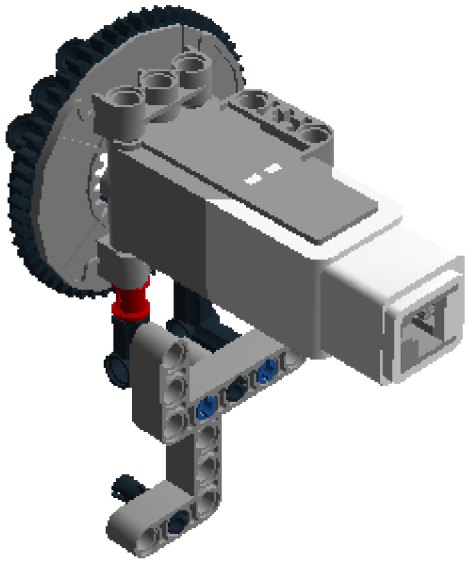

Step 9 of 78

1 x

1 x

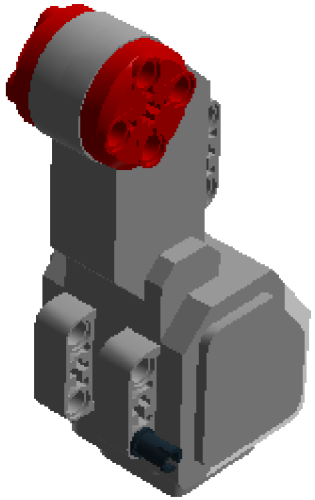

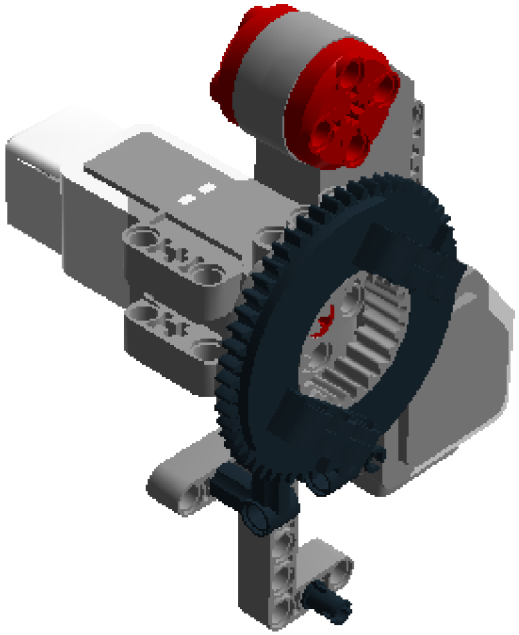

Step 11 of 78

1 x

2 x

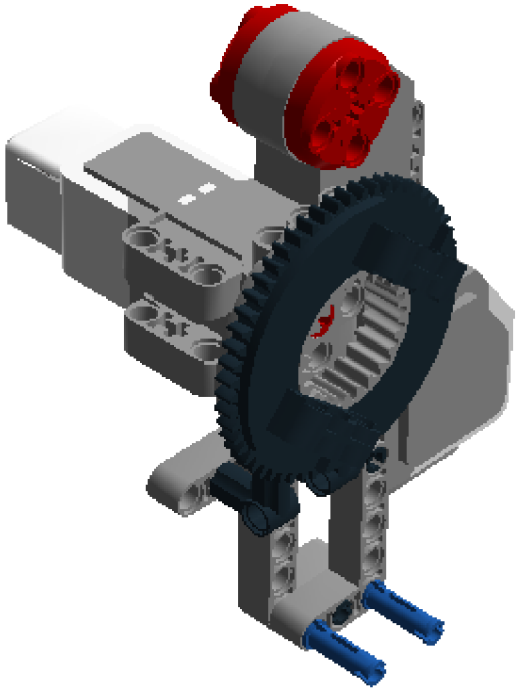

Step 12 of 78

1 x

1 x

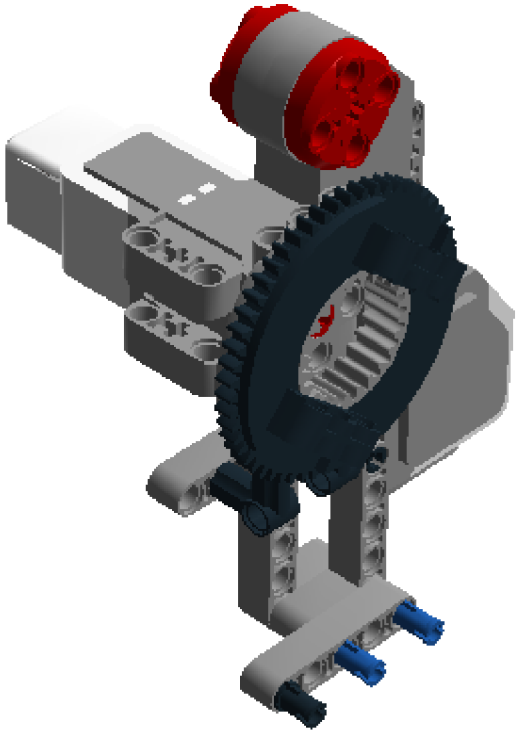

Step 13 of 78

1 x

3 x

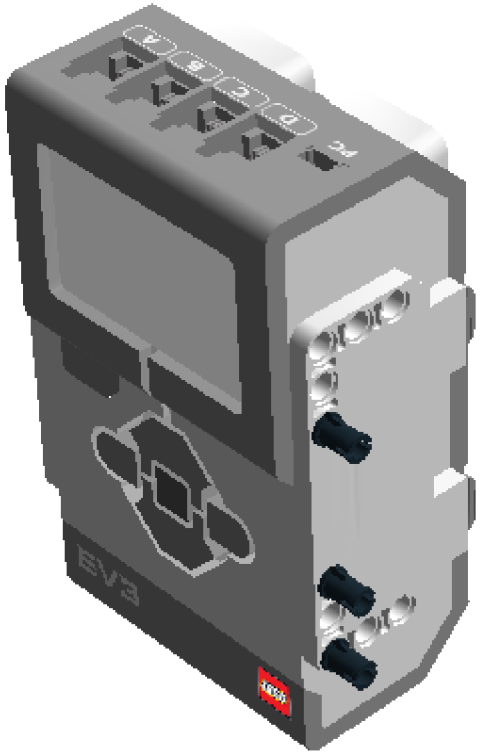

Step 14 of 78

1 x

2 x

1 x

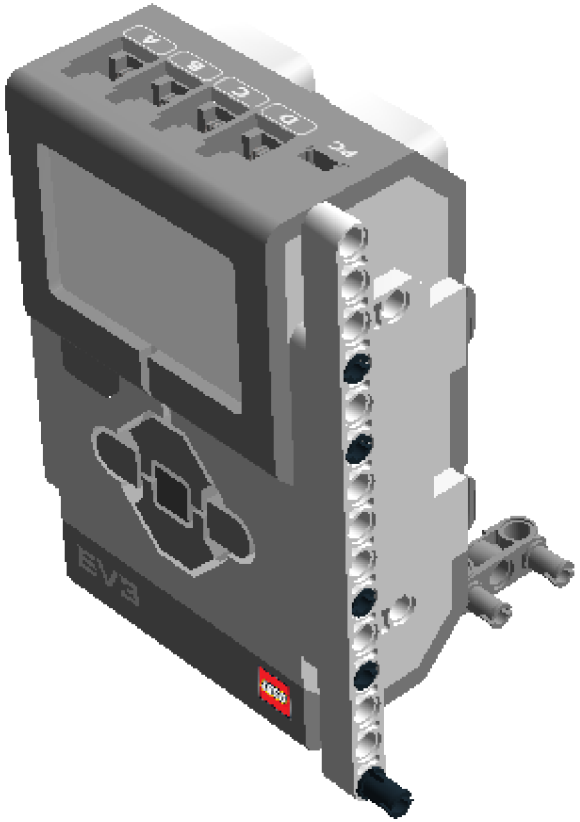

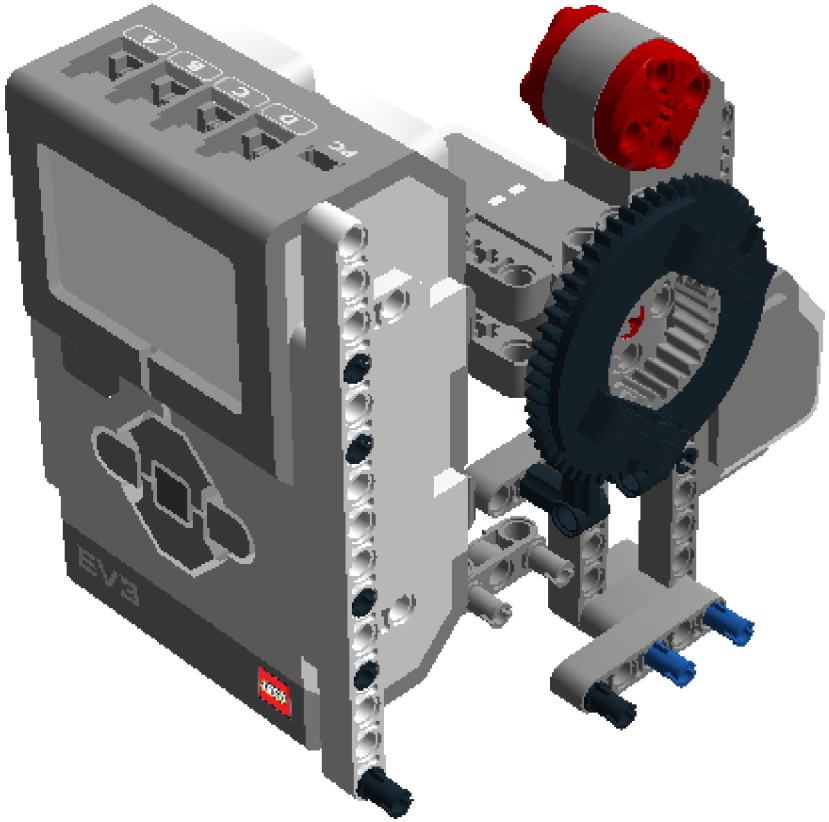
EV3

Step 16 of 78

1 x

2 x

1 x

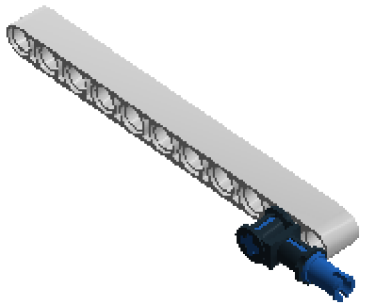

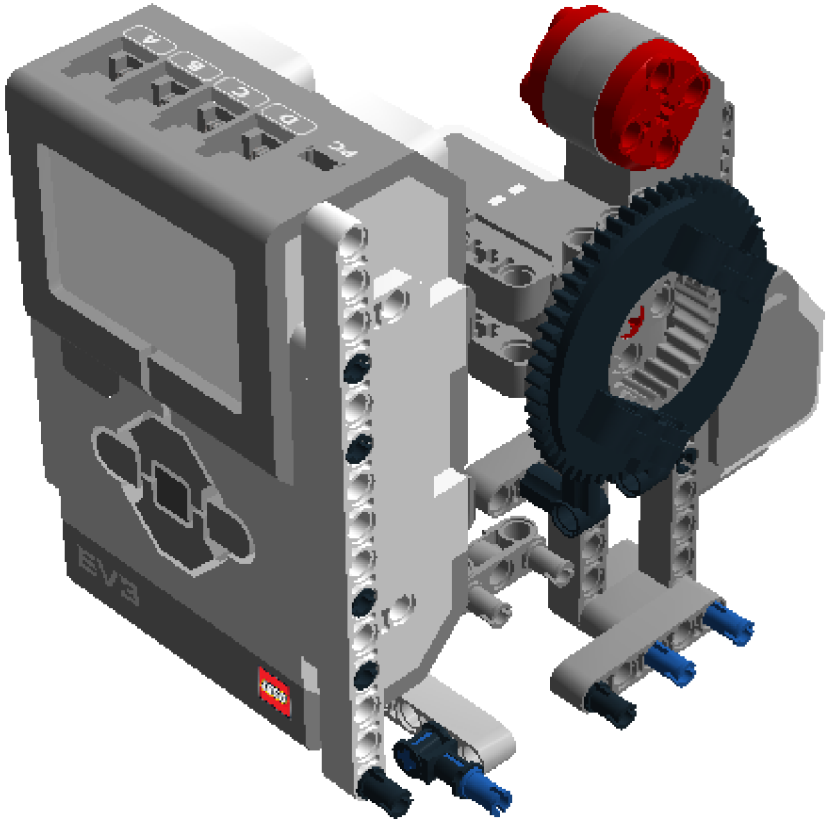
EV3

Step 18 of 78

1 x

2 x

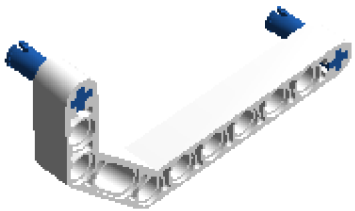

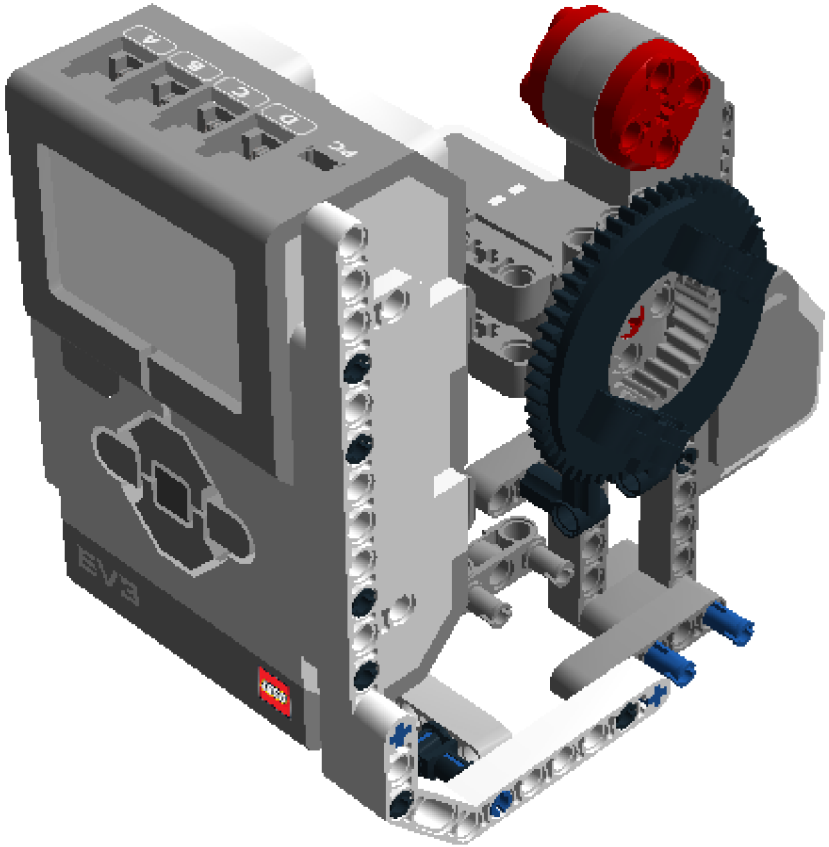
EV3

Step 20 of 78

1 x

2 x

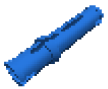

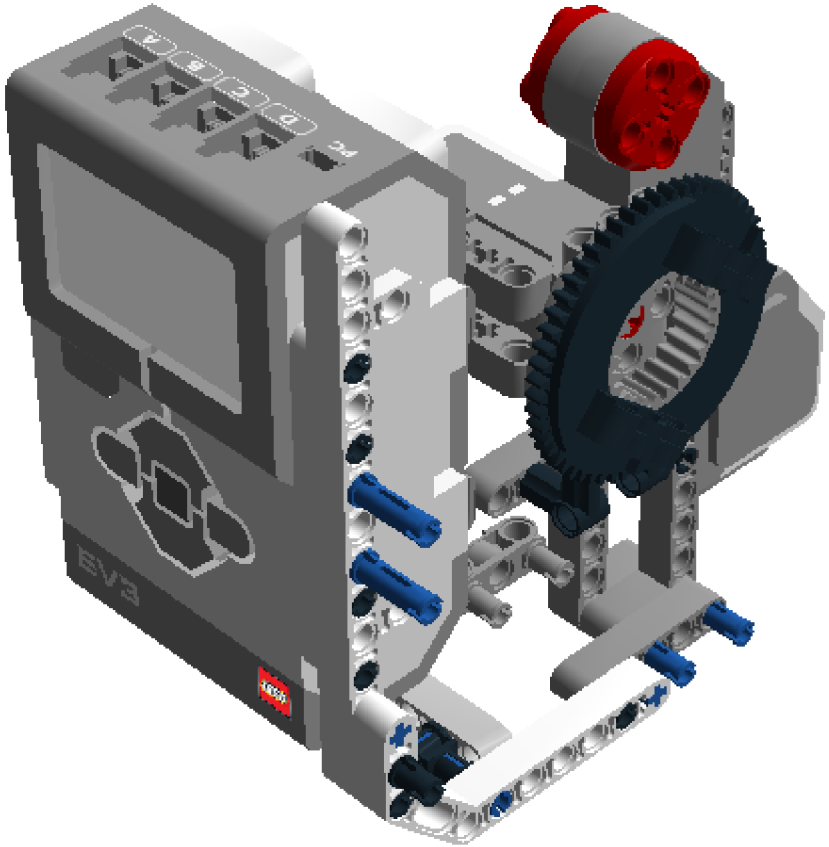

Step 21 of 78

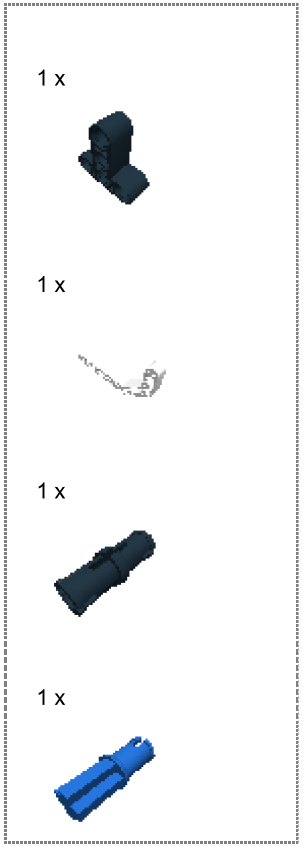

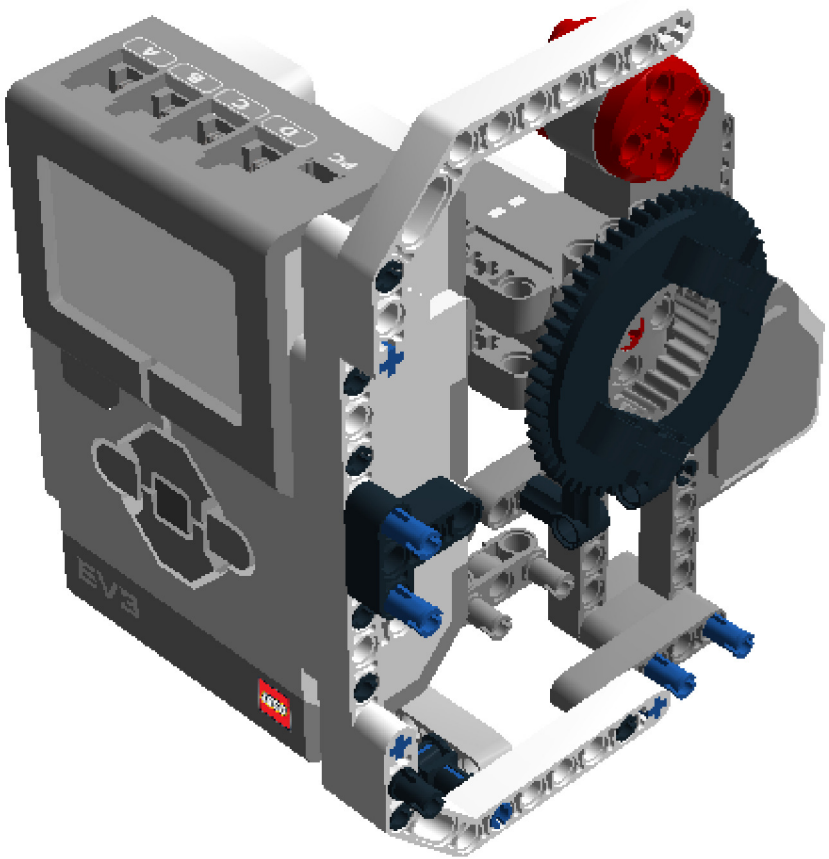

Step 22 of 78

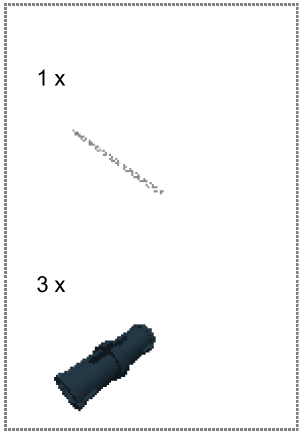

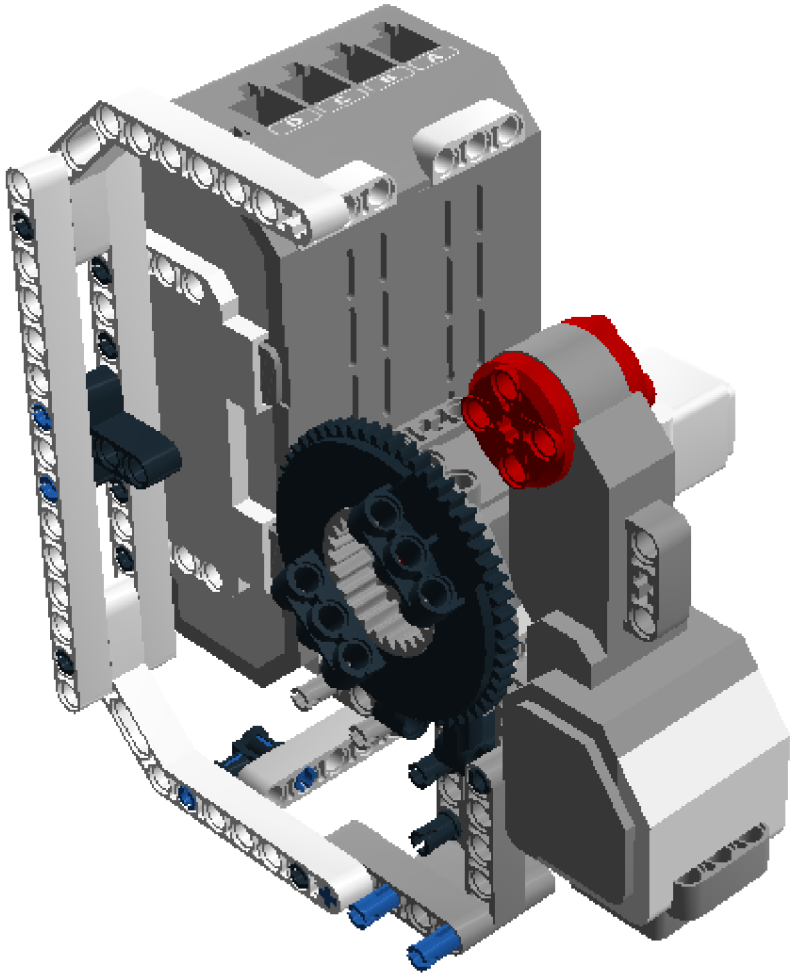

Step 23 of 78

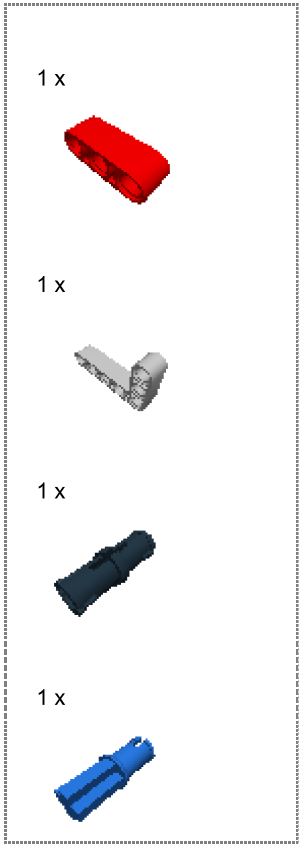

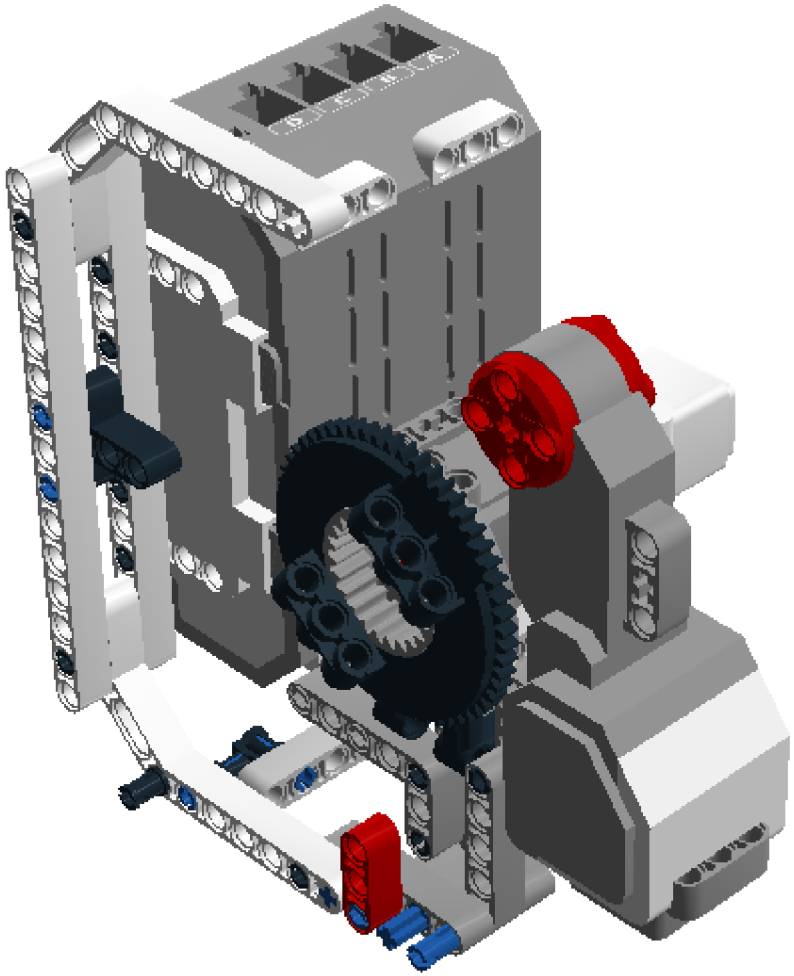

Step 24 of 78

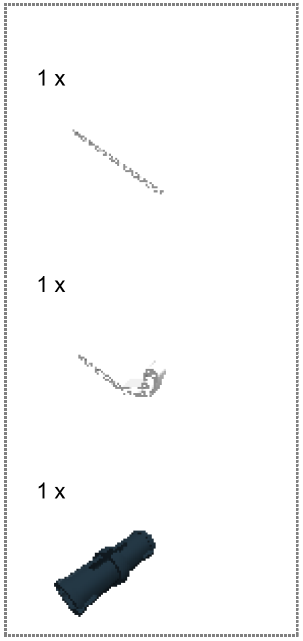

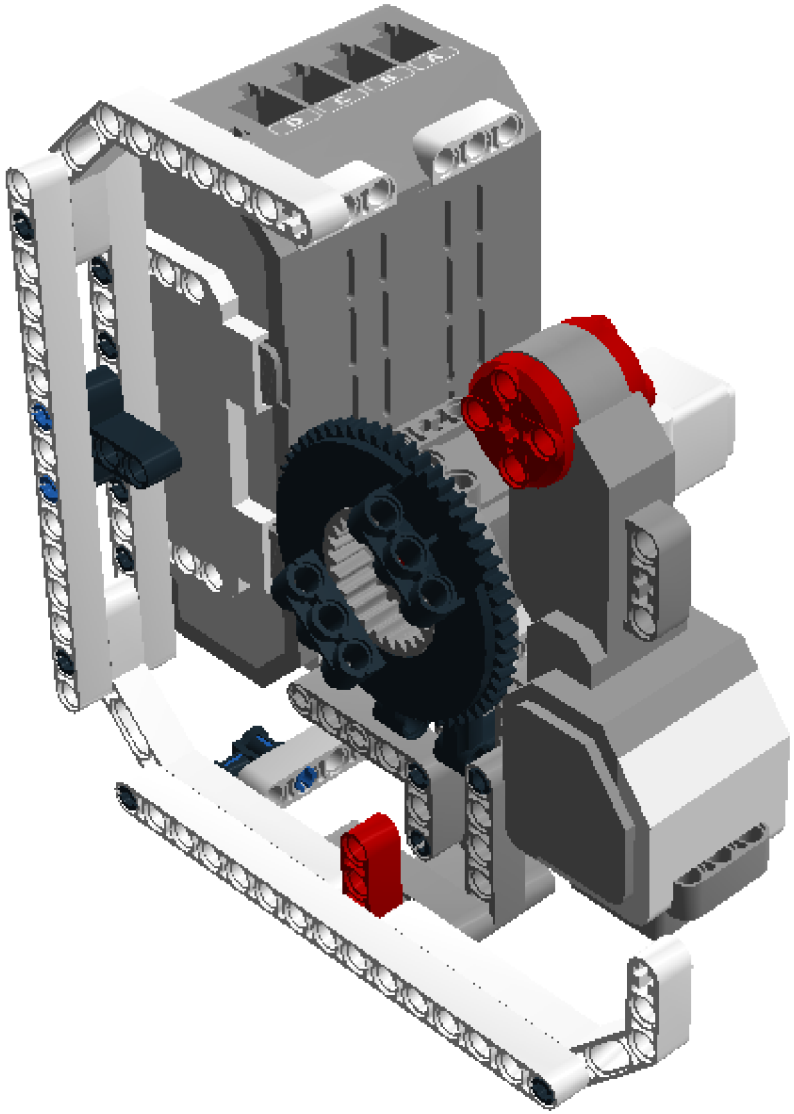

Step 25 of 78

1 x

2 x

1 x

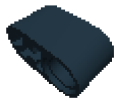

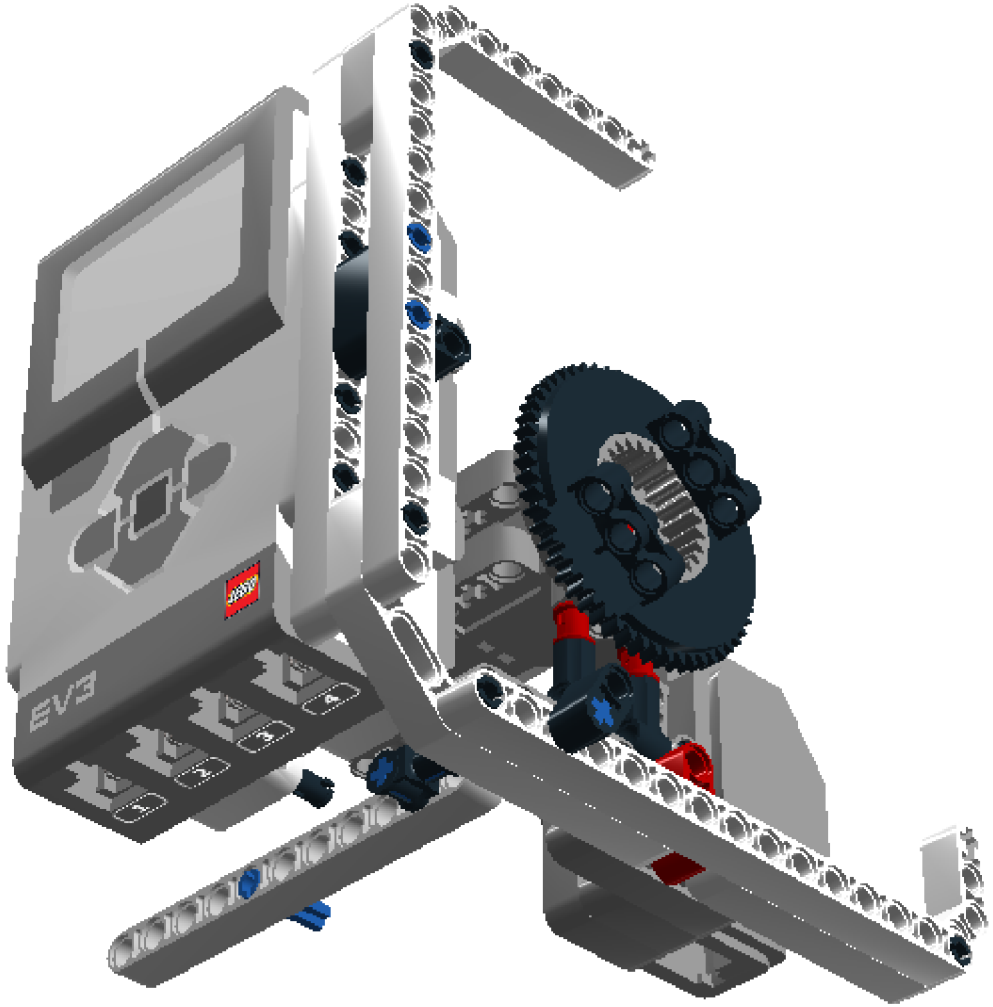

Step 26 of 78

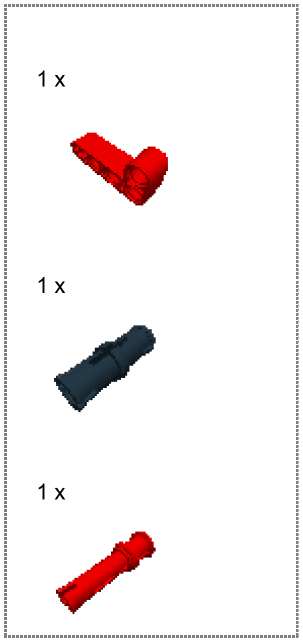

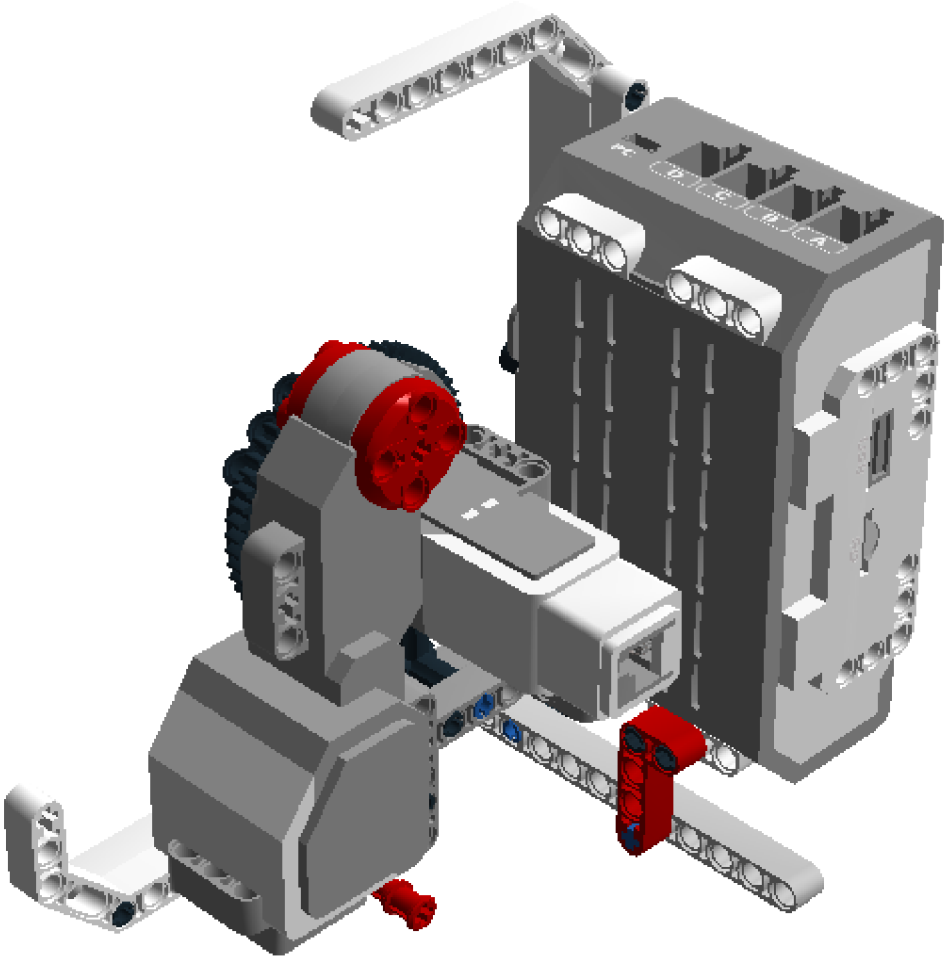

Step 27 of 78

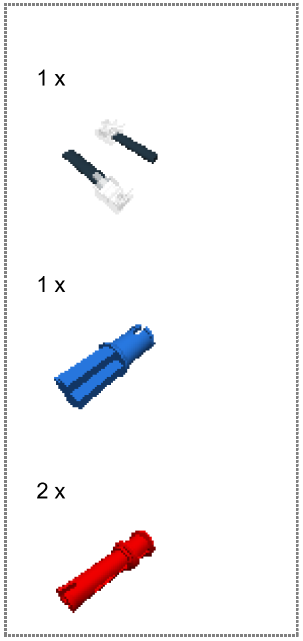

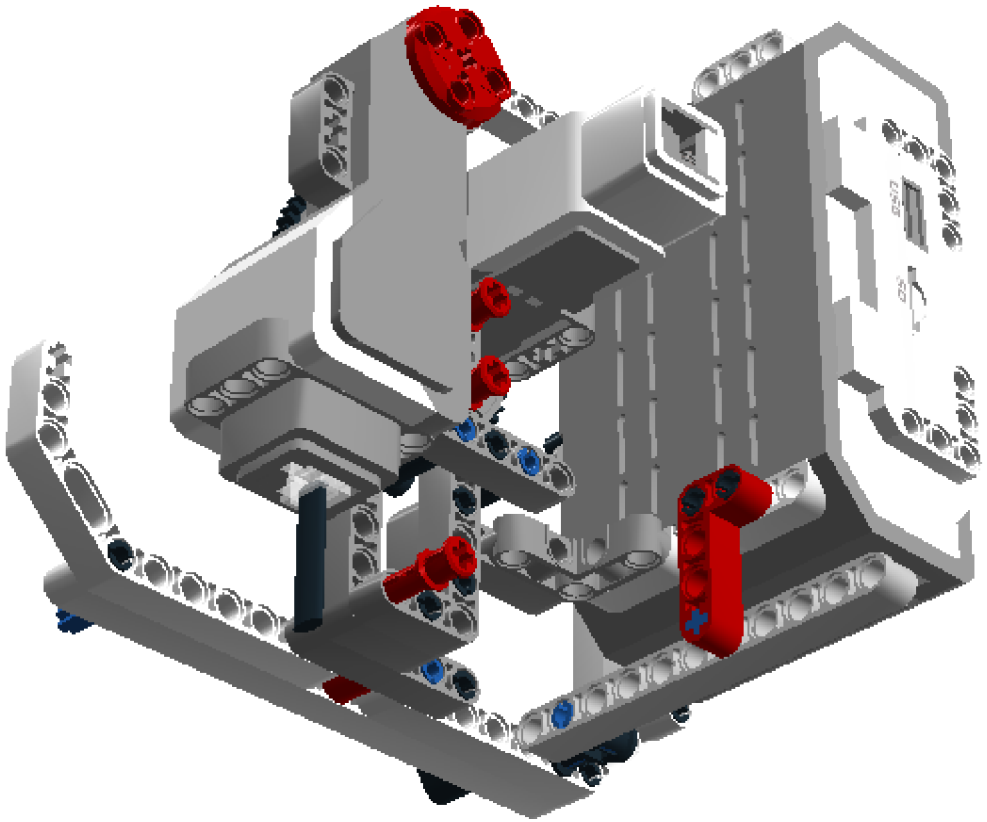

Step 28 of 78

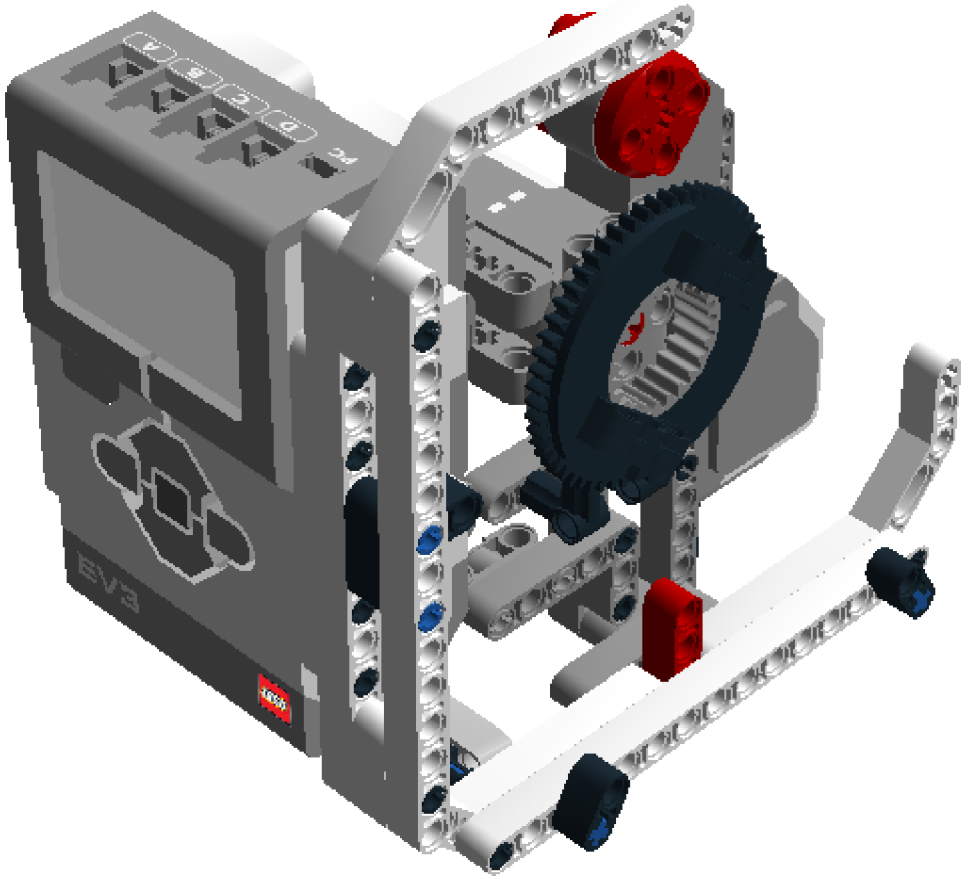

Step 29 of 78

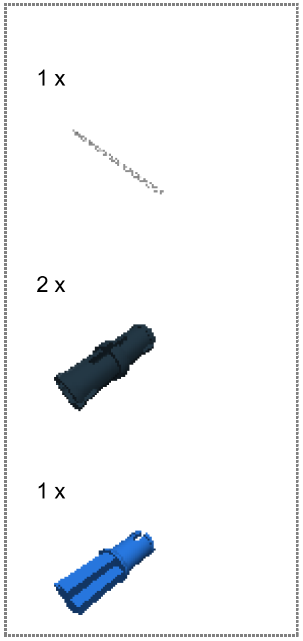

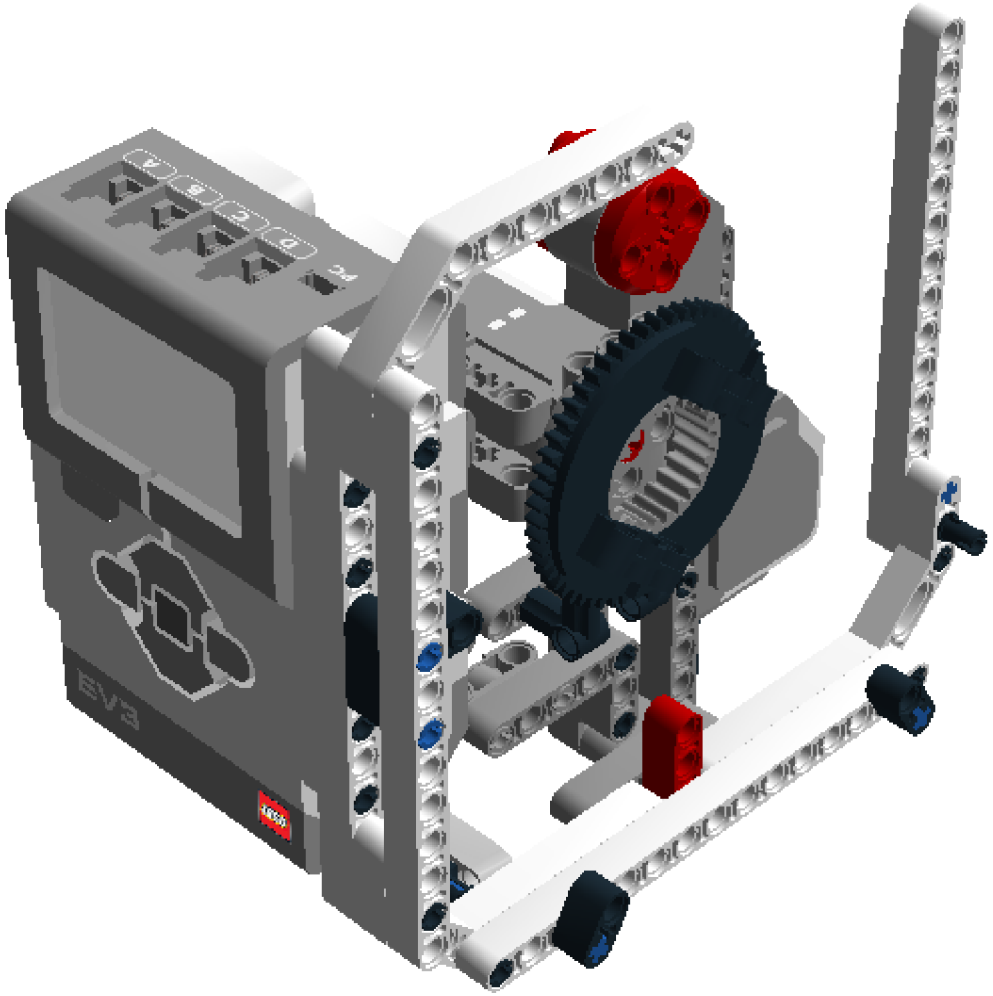

Step 30 of 78

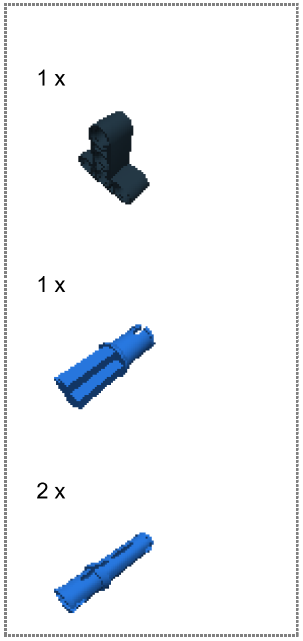

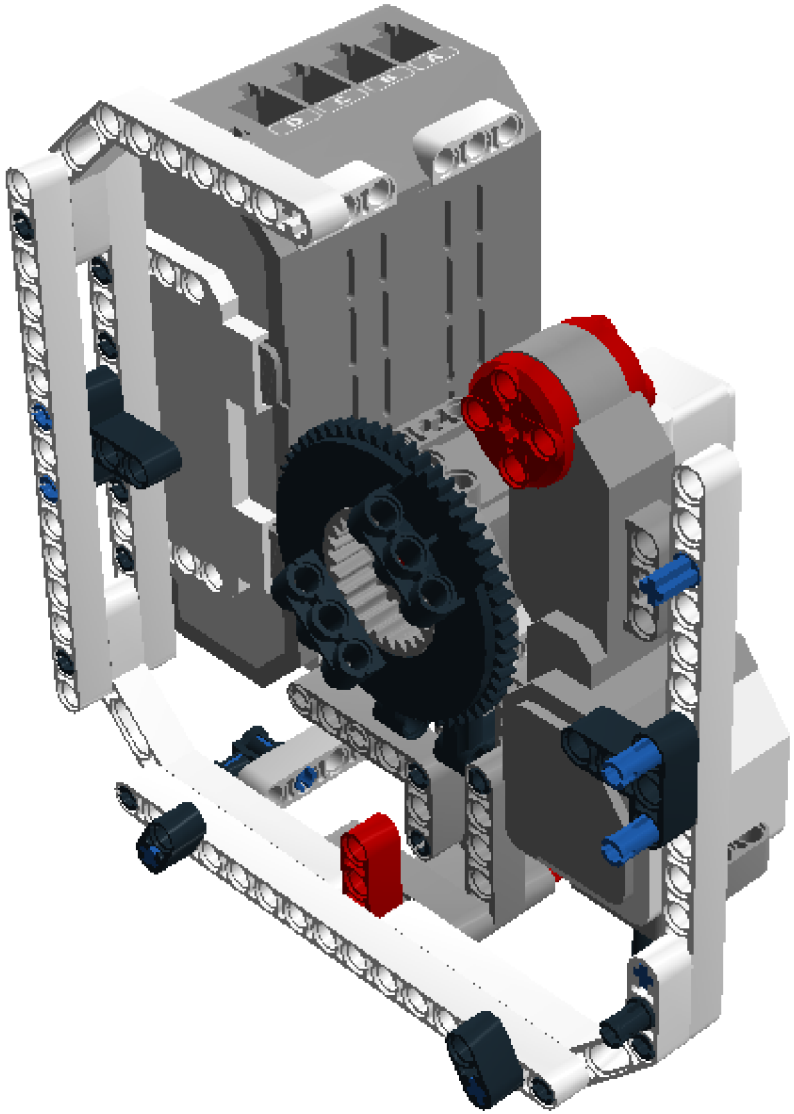

Step 31 of 78

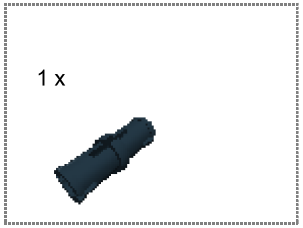

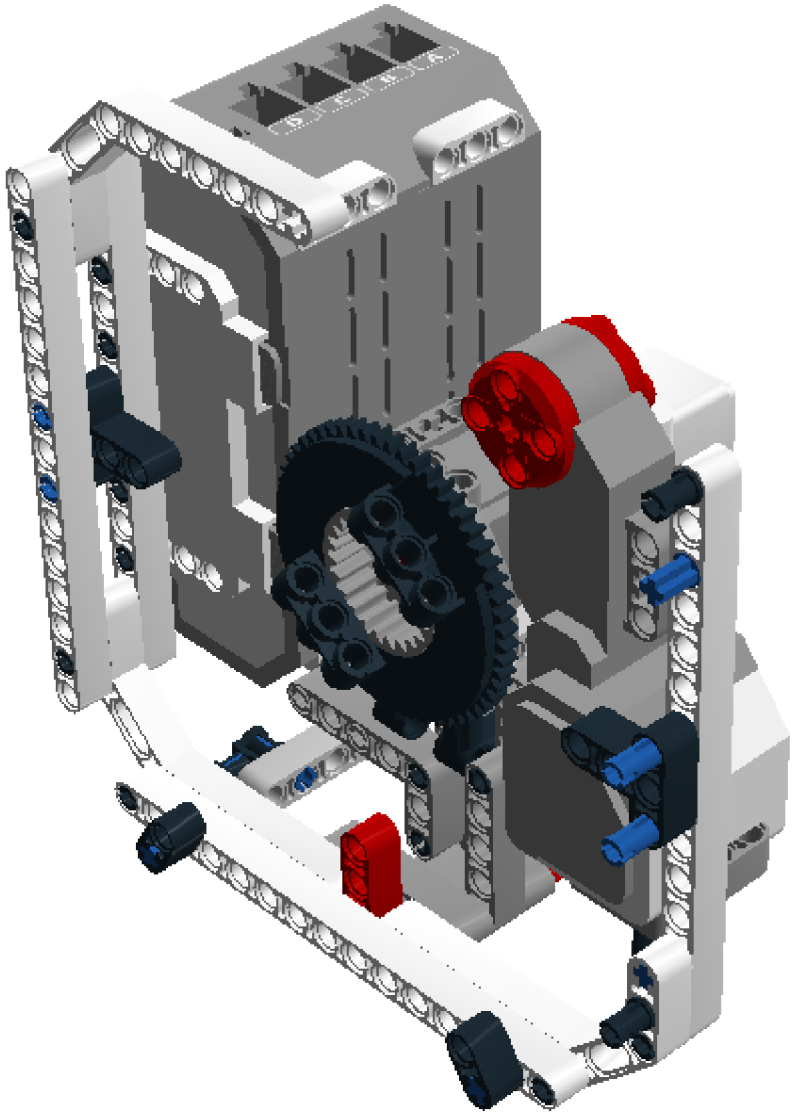

Step 32 of 78

2 x

1 x

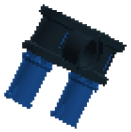

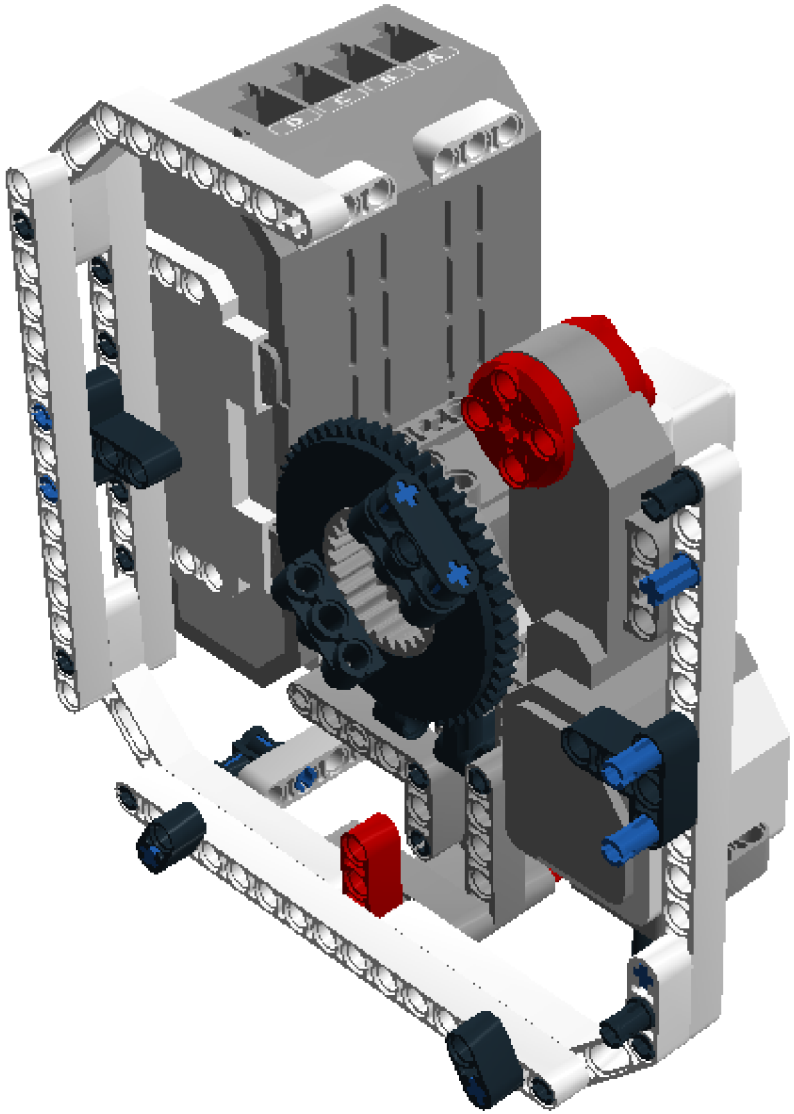

Step 34 of 78

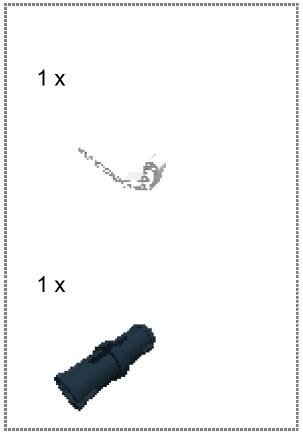

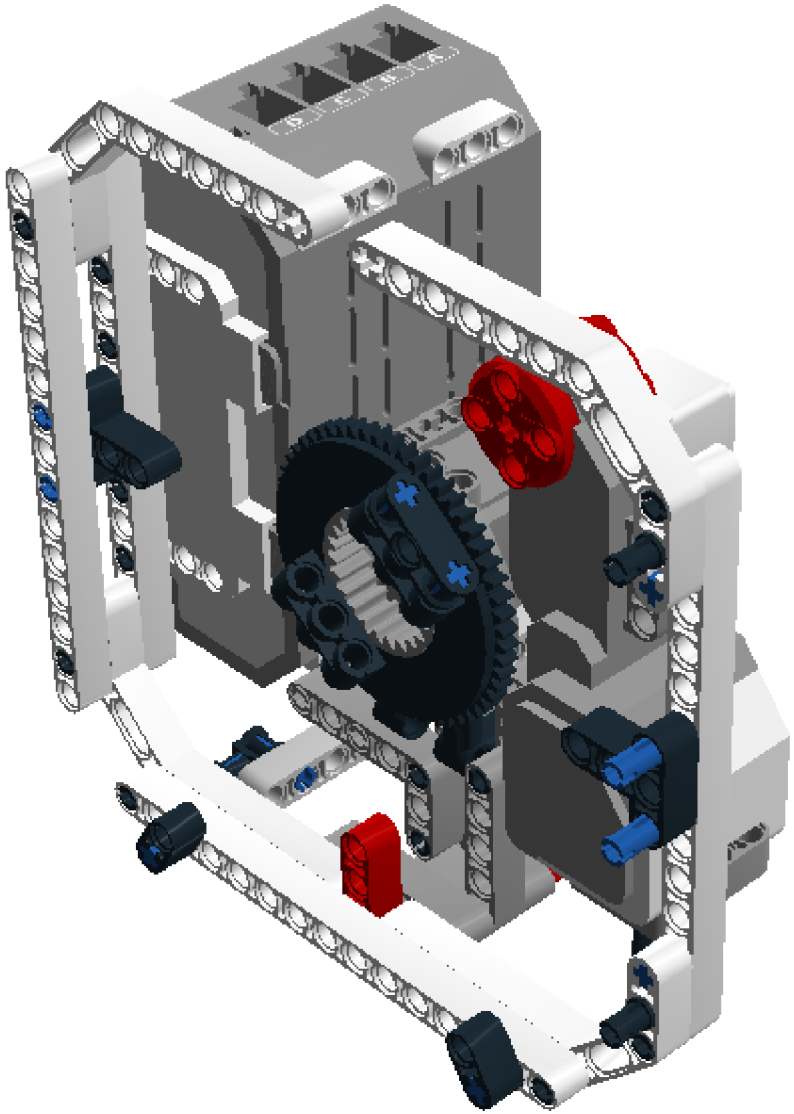

Step 35 of 78

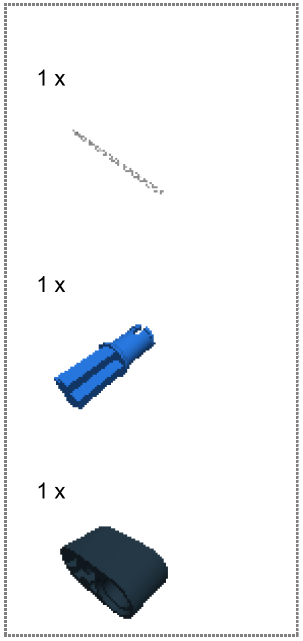

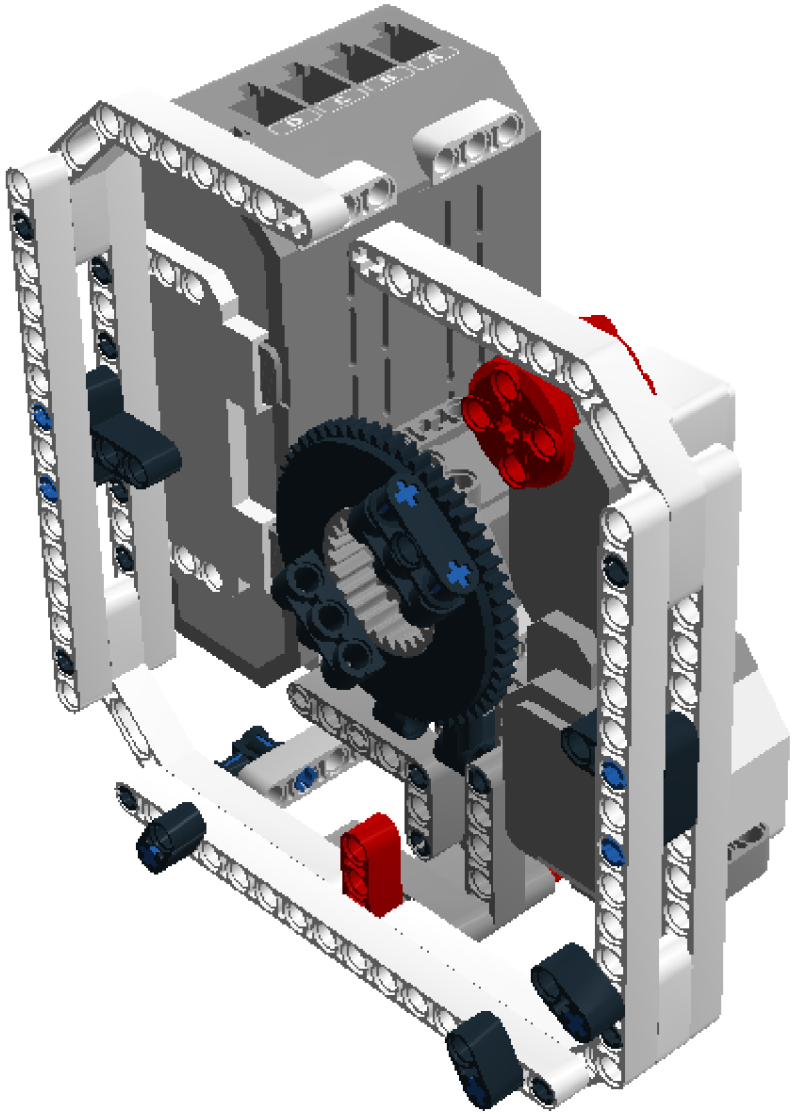

Step 36 of 78

2 x

1 x

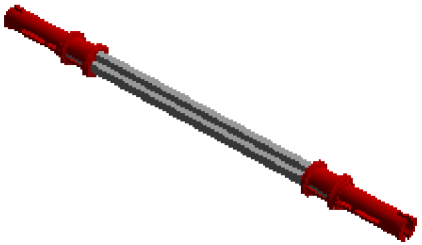

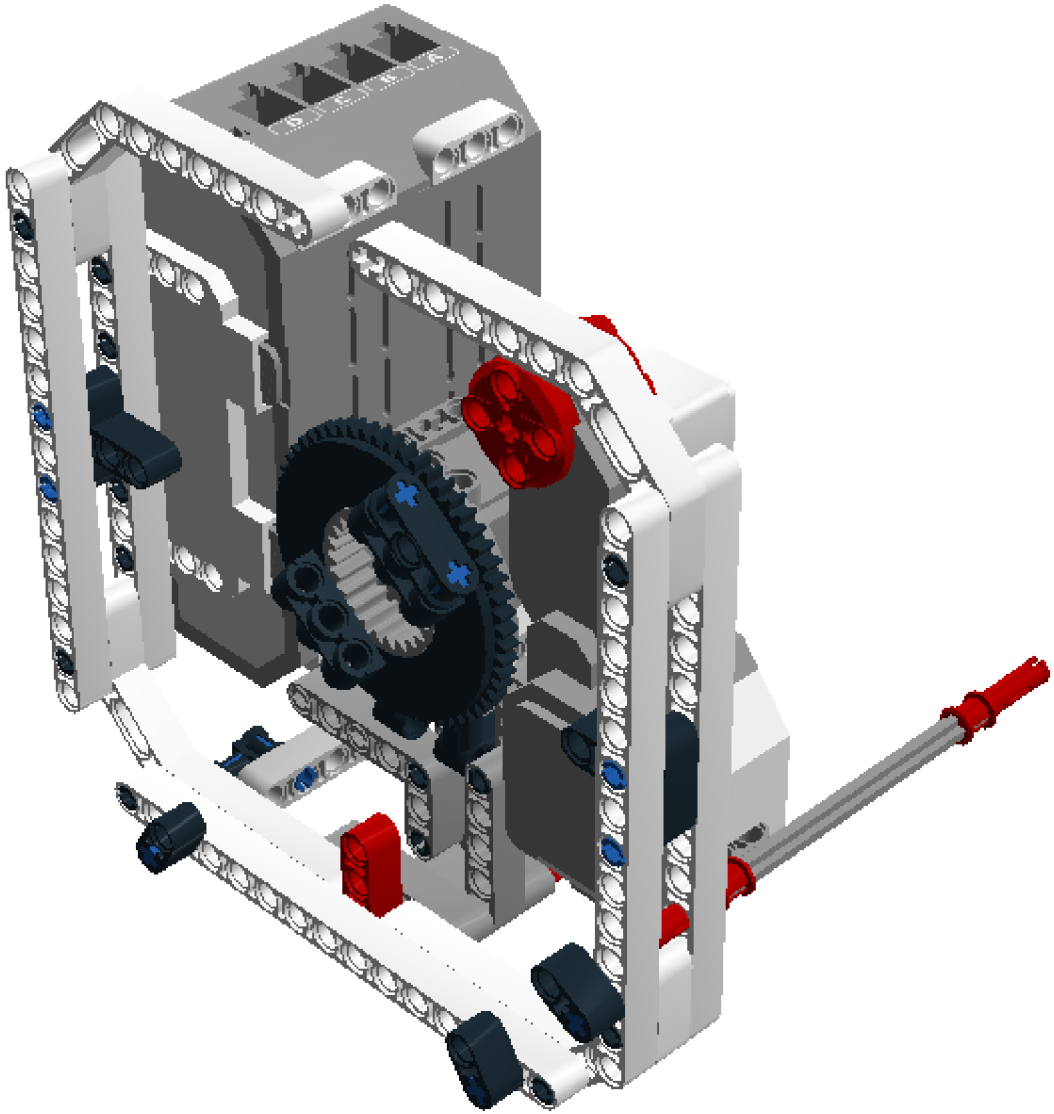

Step 38 of 78

2 x

1 x

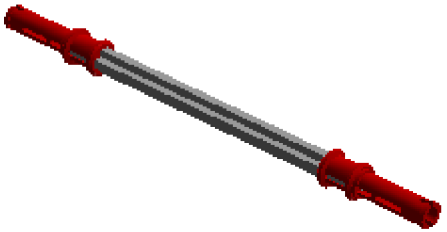

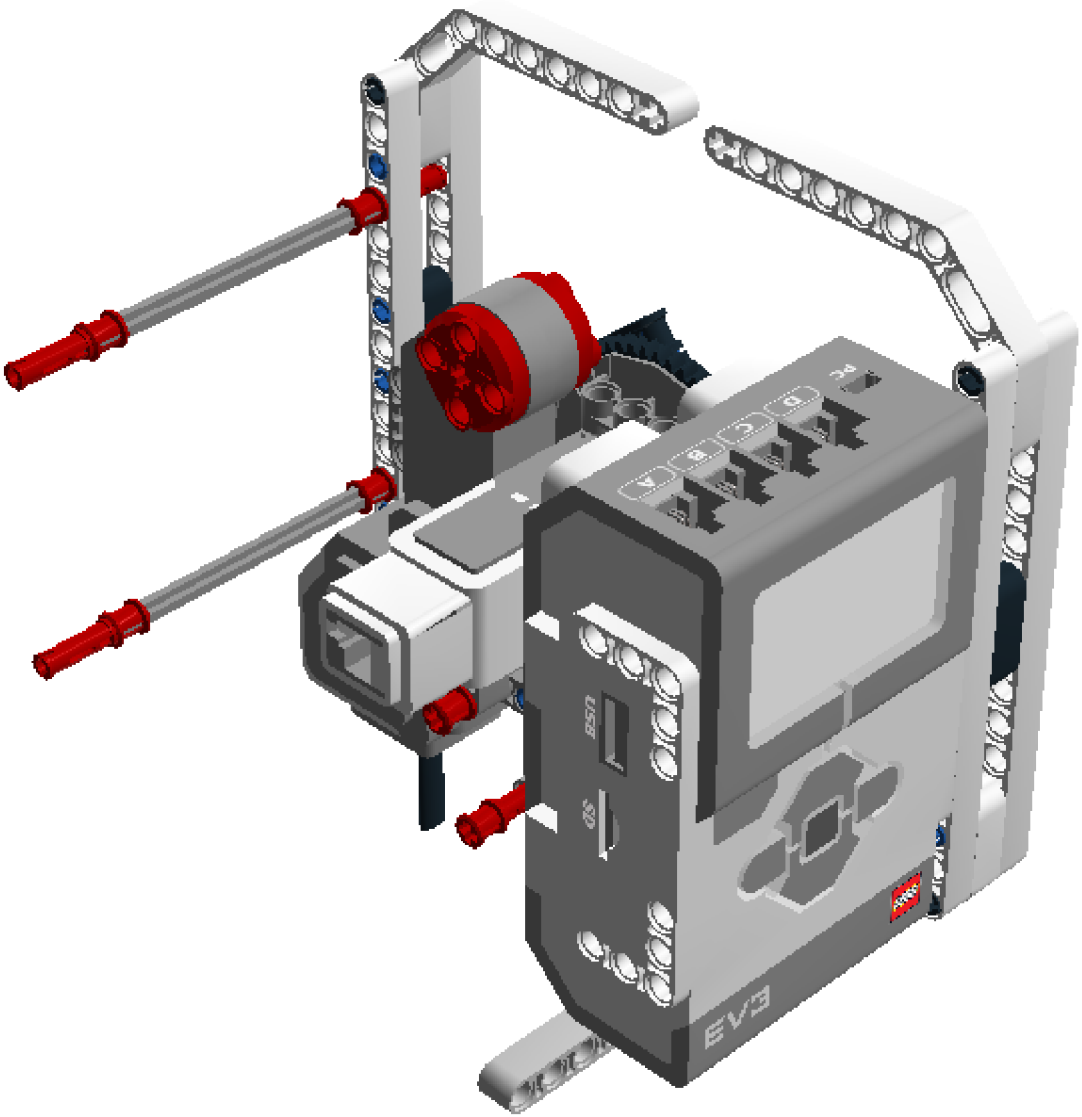
USB
SD
EV3

Step 40 of 78

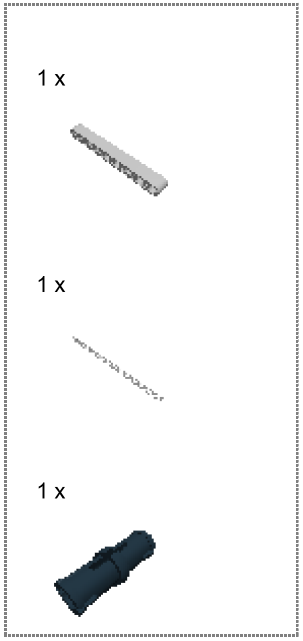

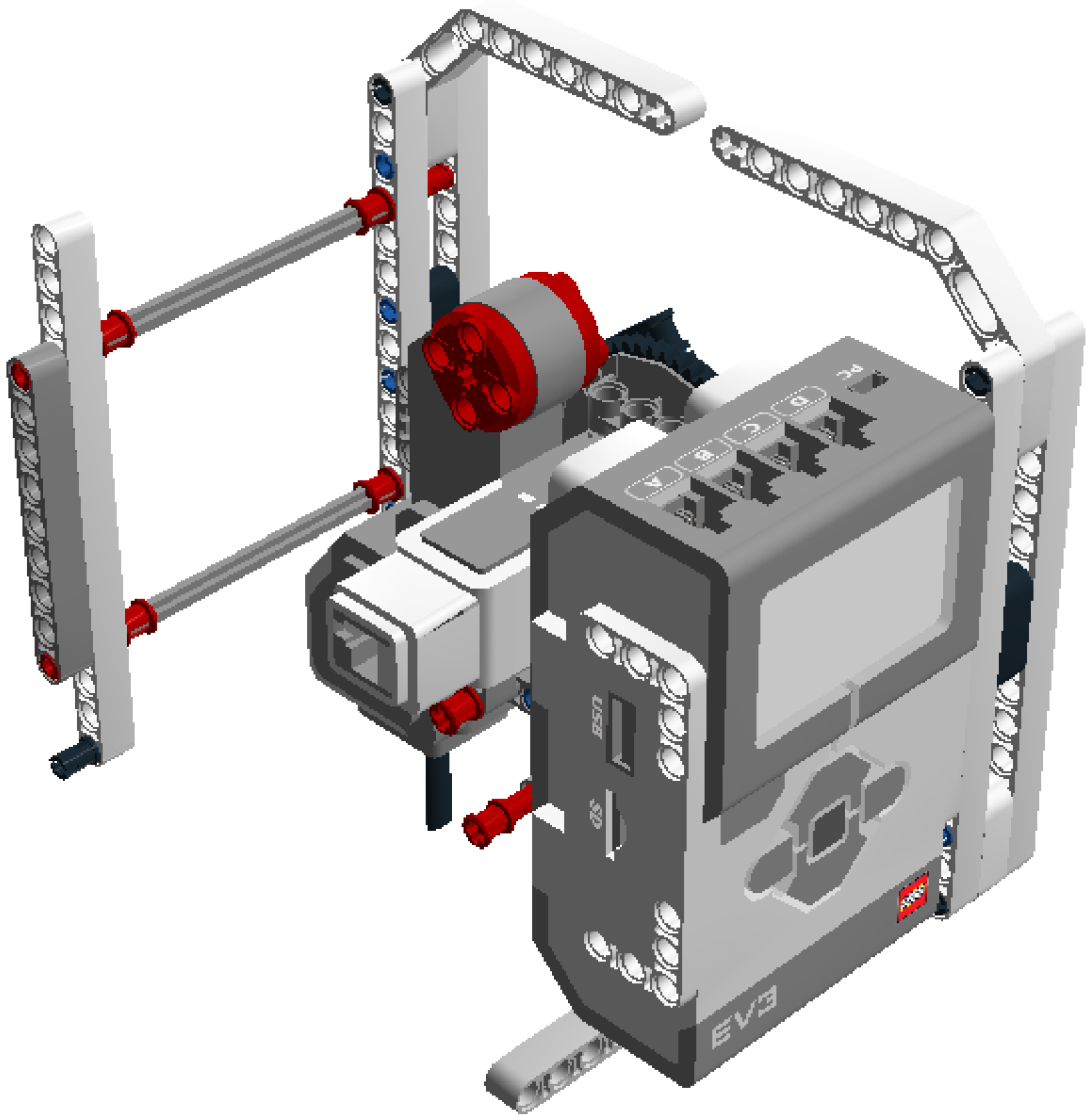

Step 41 of 78

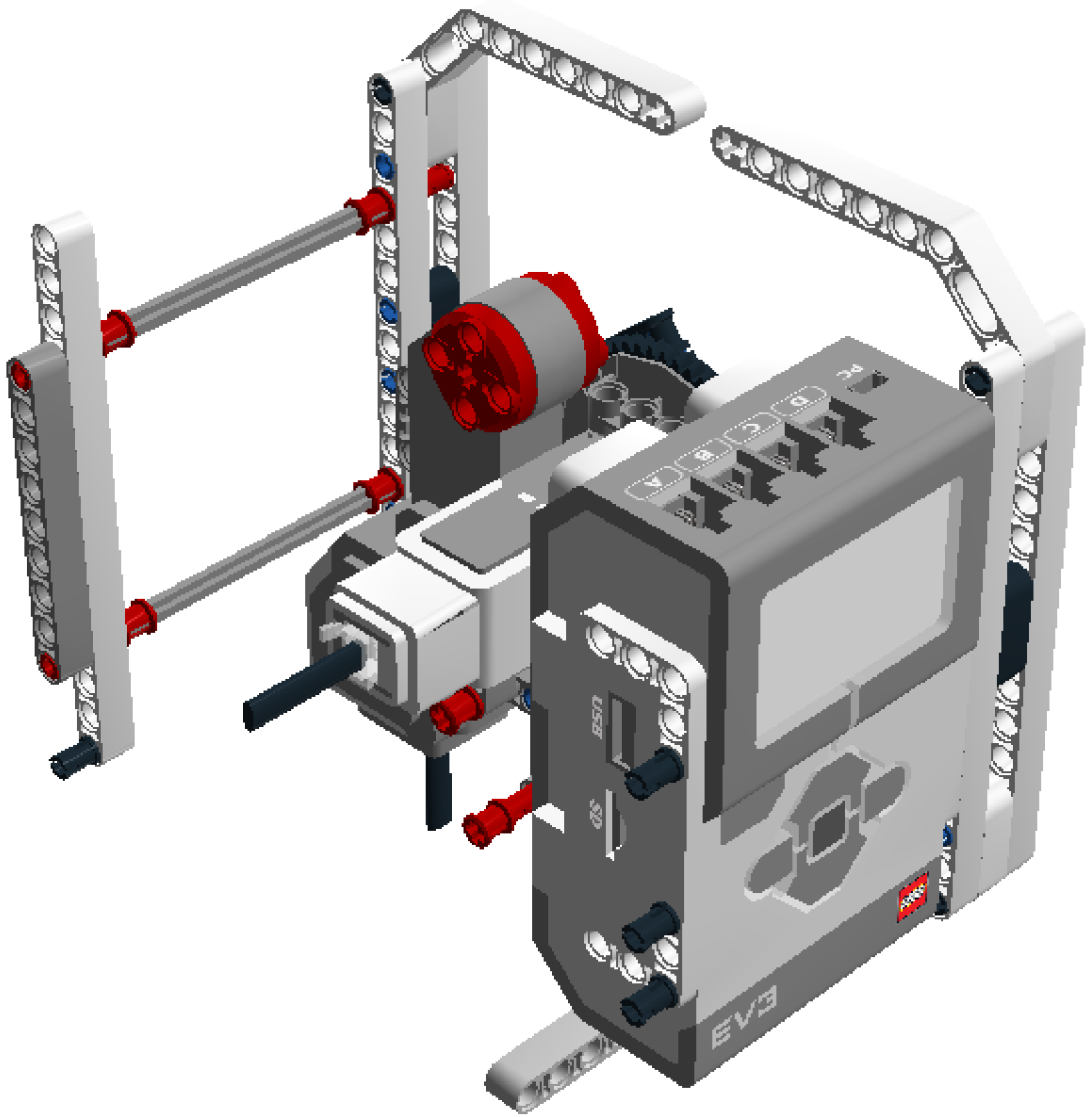

Step 42 of 78

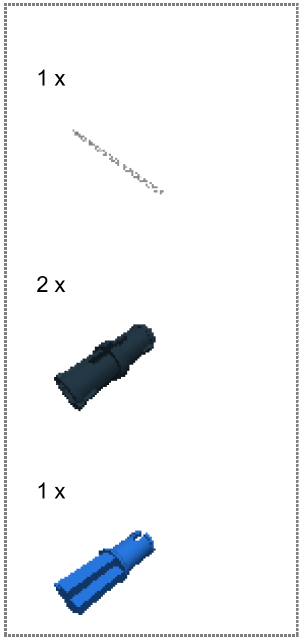

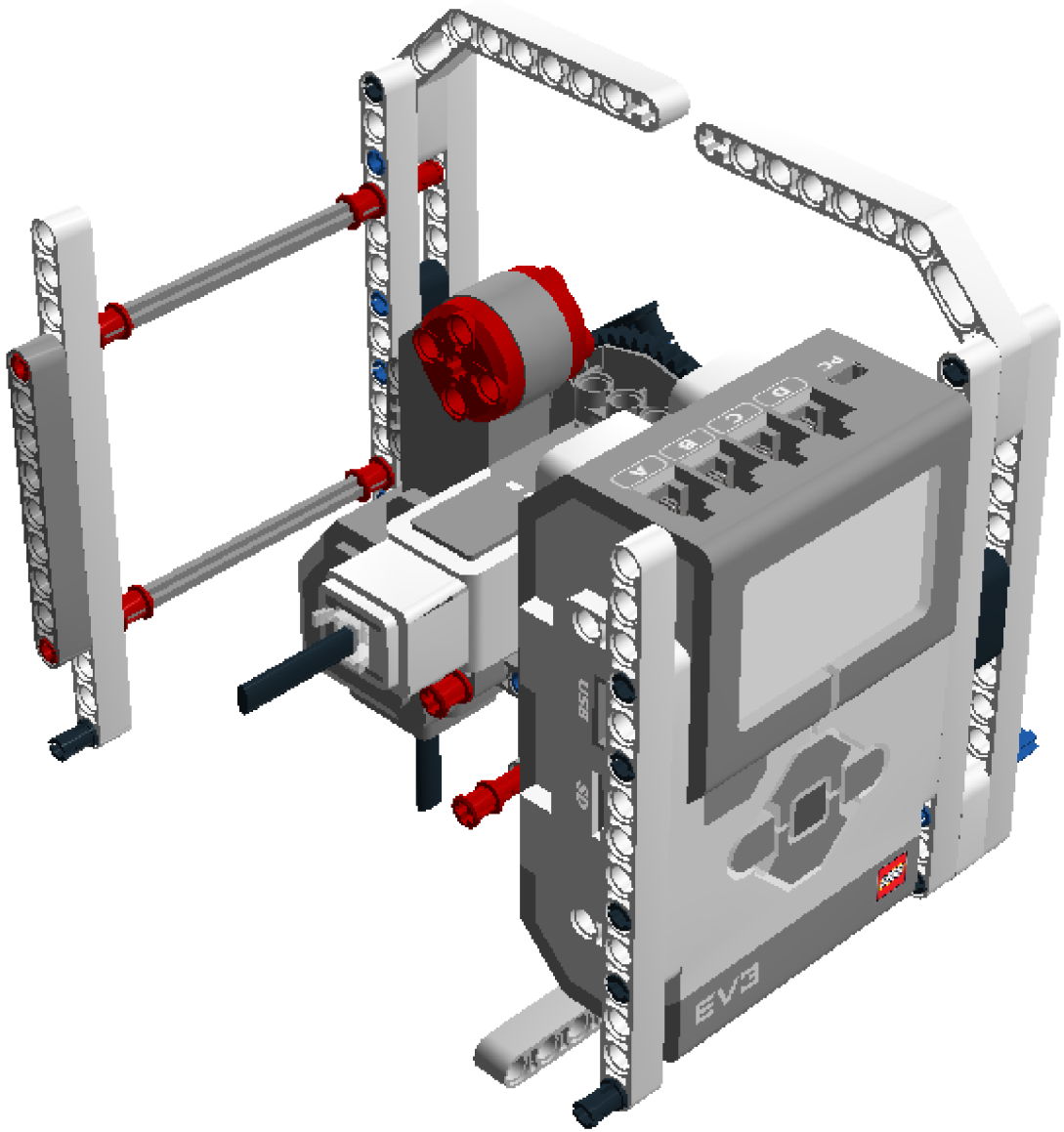

Step 43 of 78

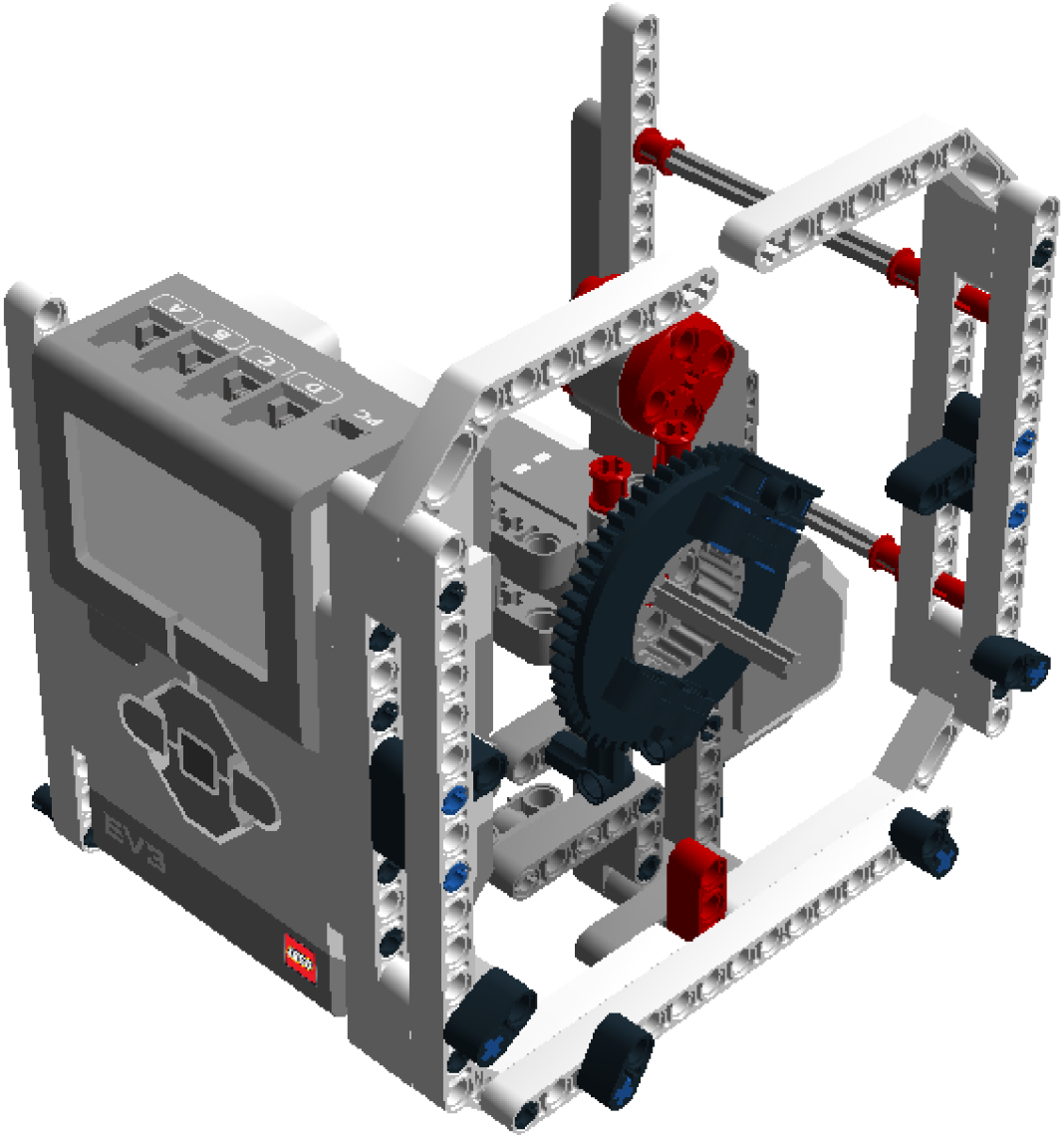

Step 44 of 78

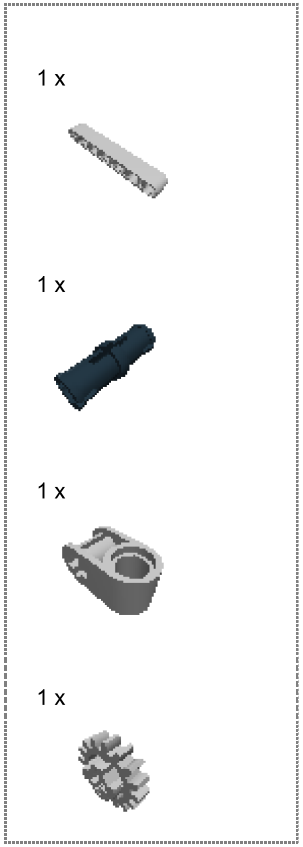

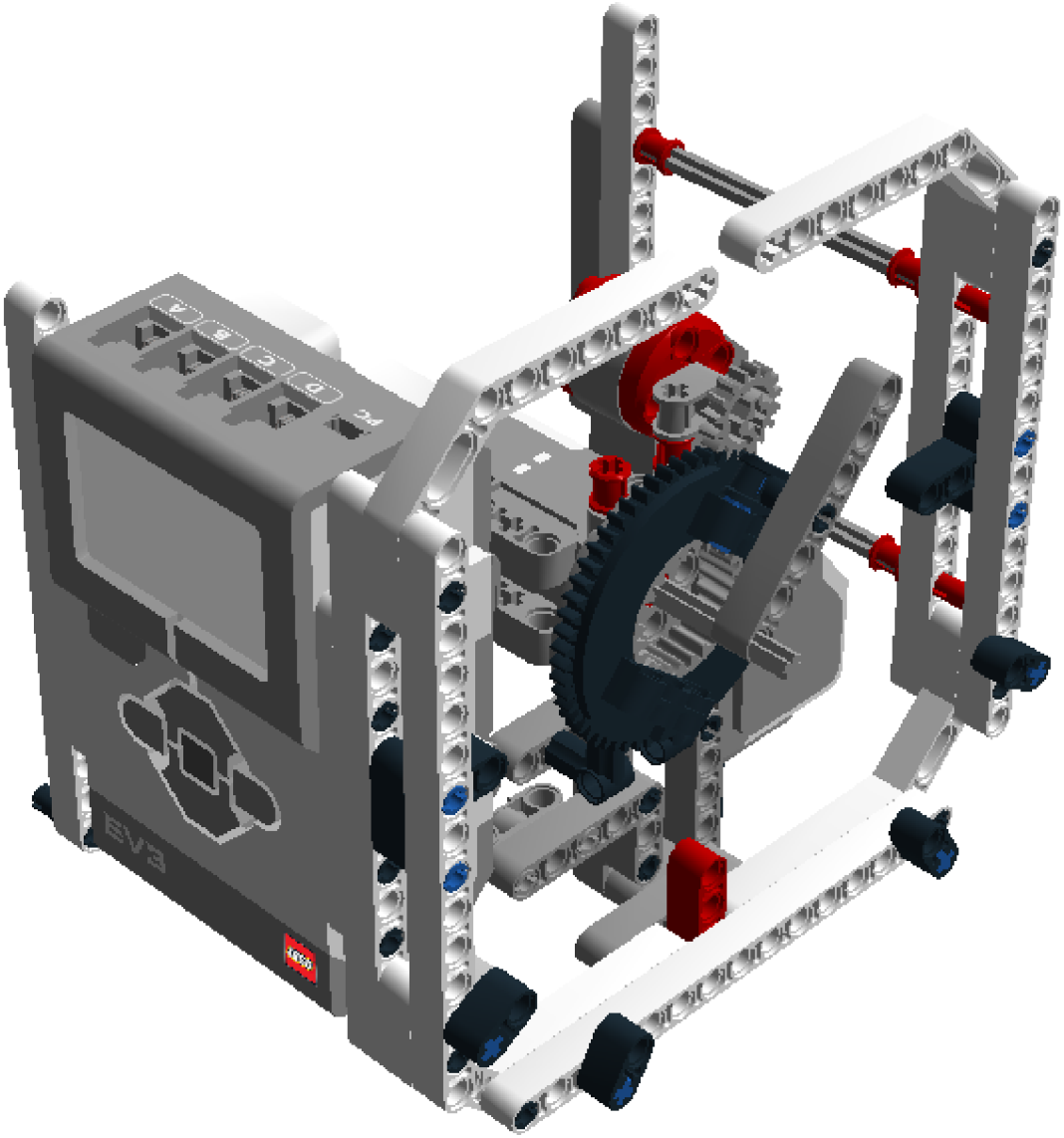

Step 45 of 78

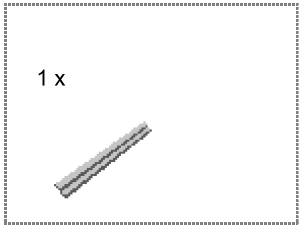

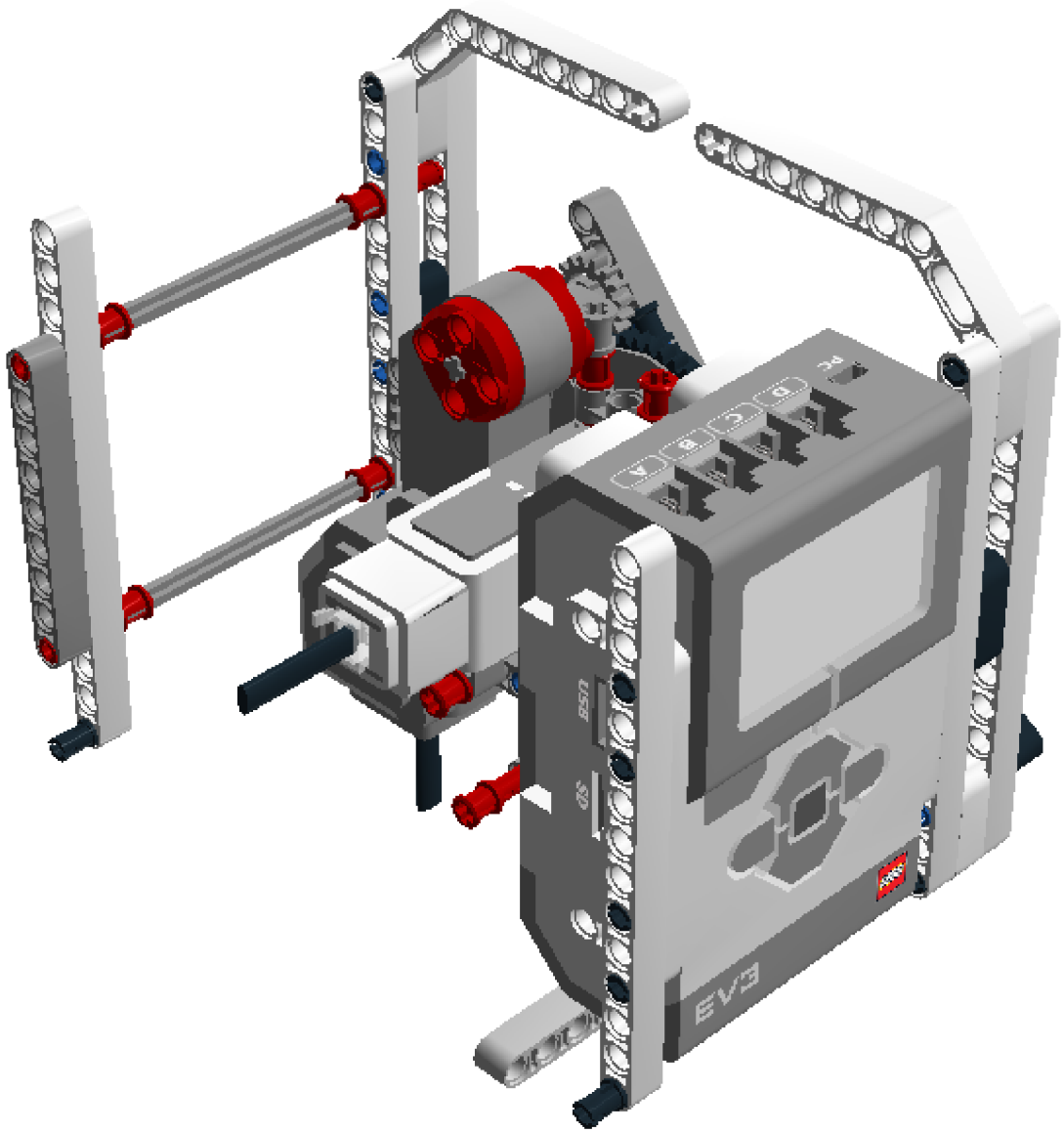

Step 46 of 78

1 x

1 x

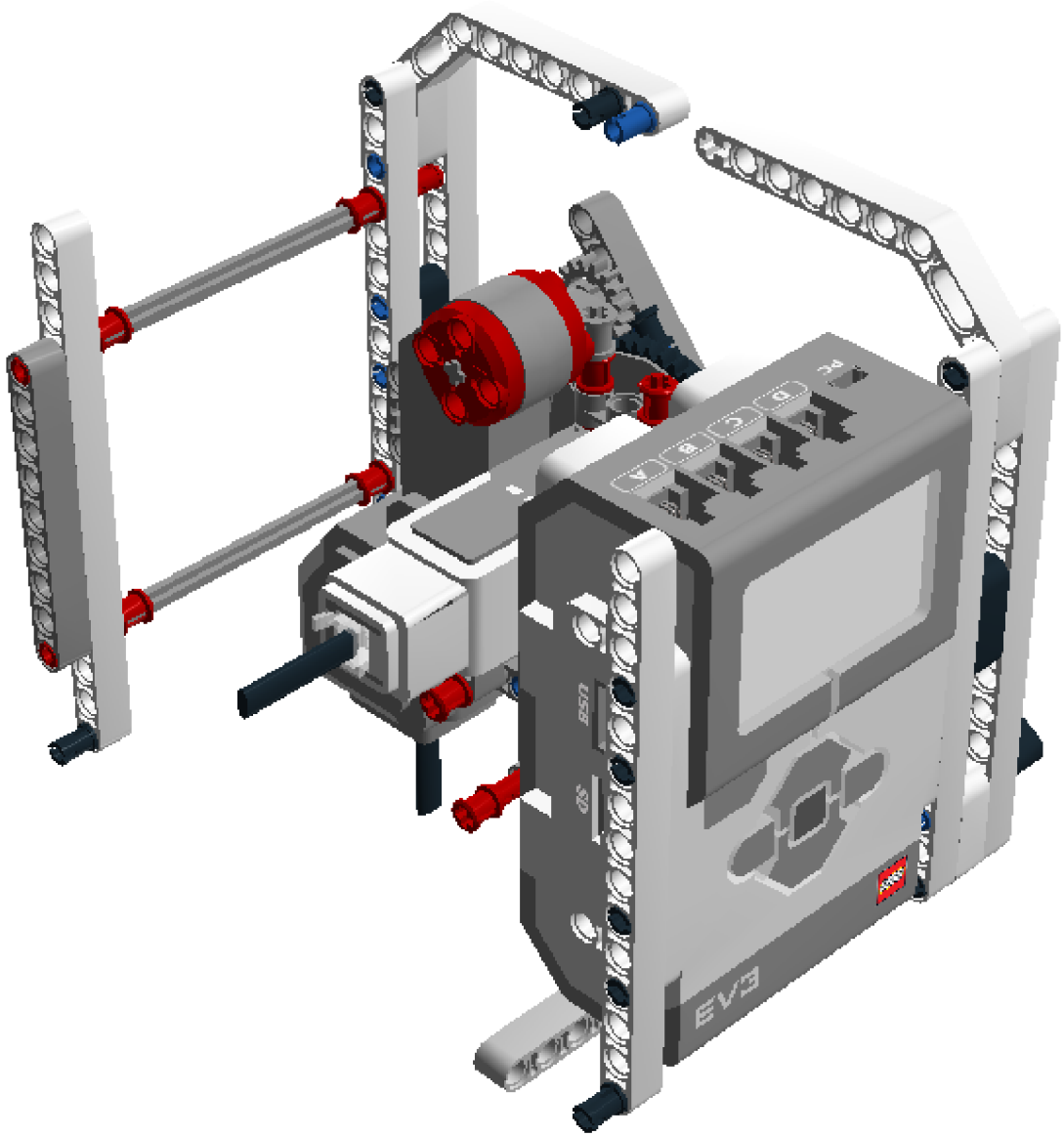

Step 47 of 78

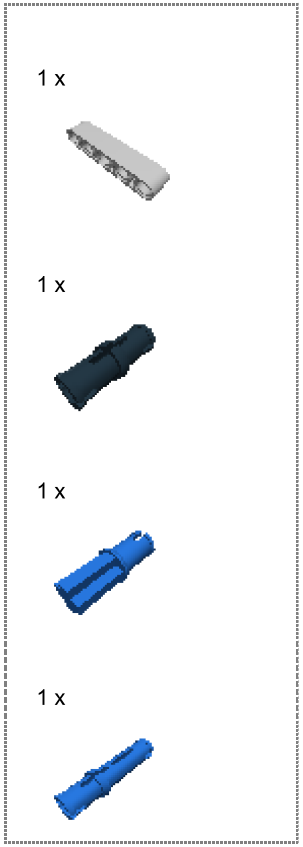

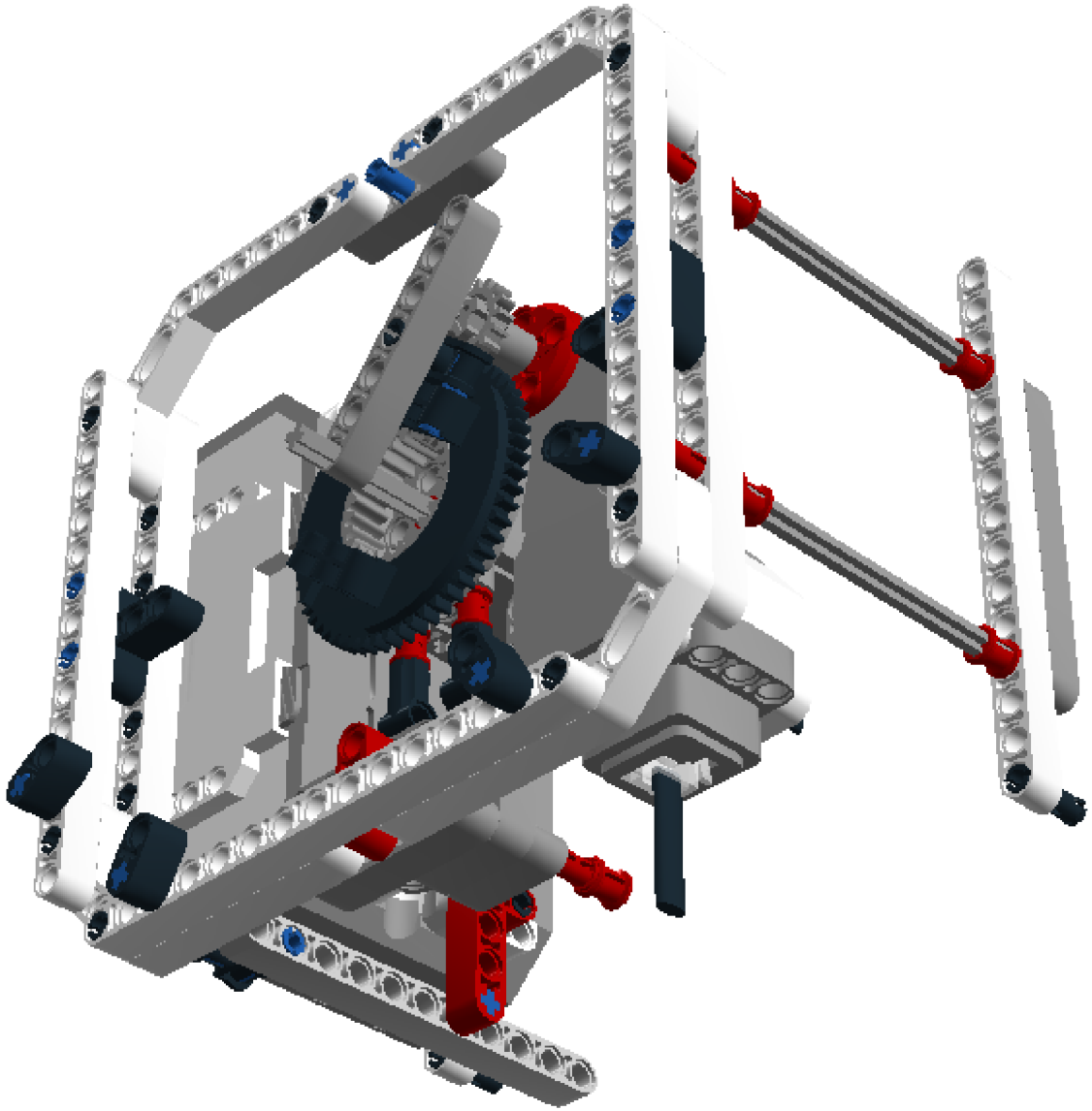

Step 48 of 78

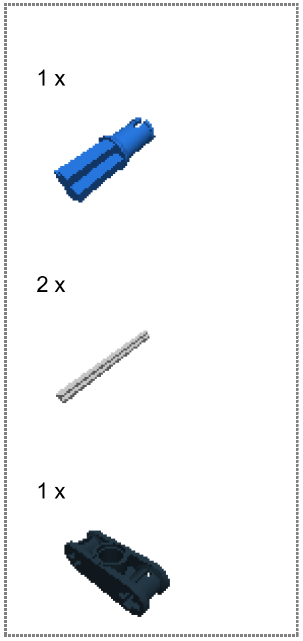

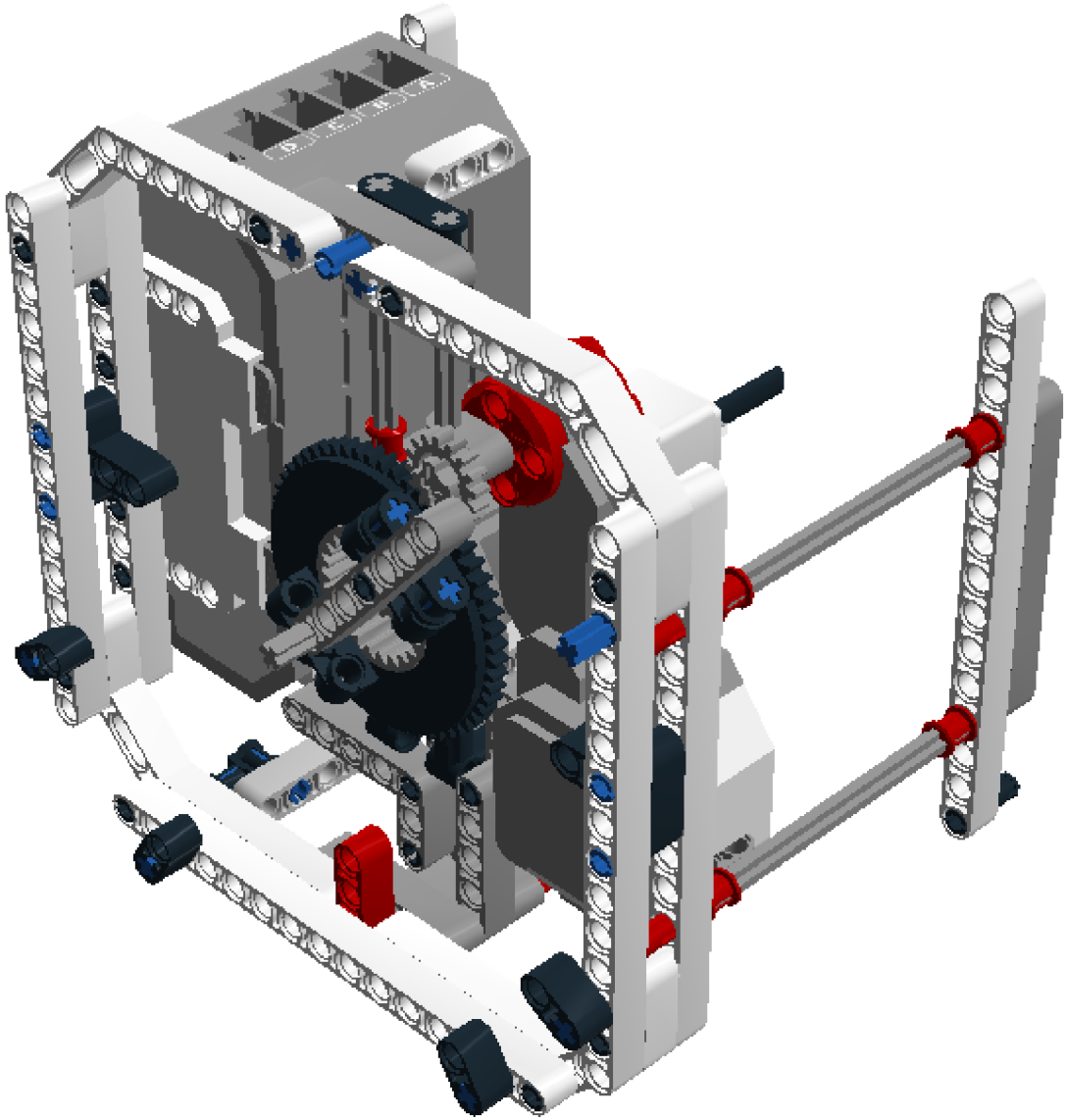

Step 49 of 78

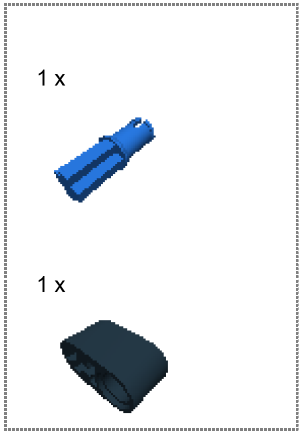

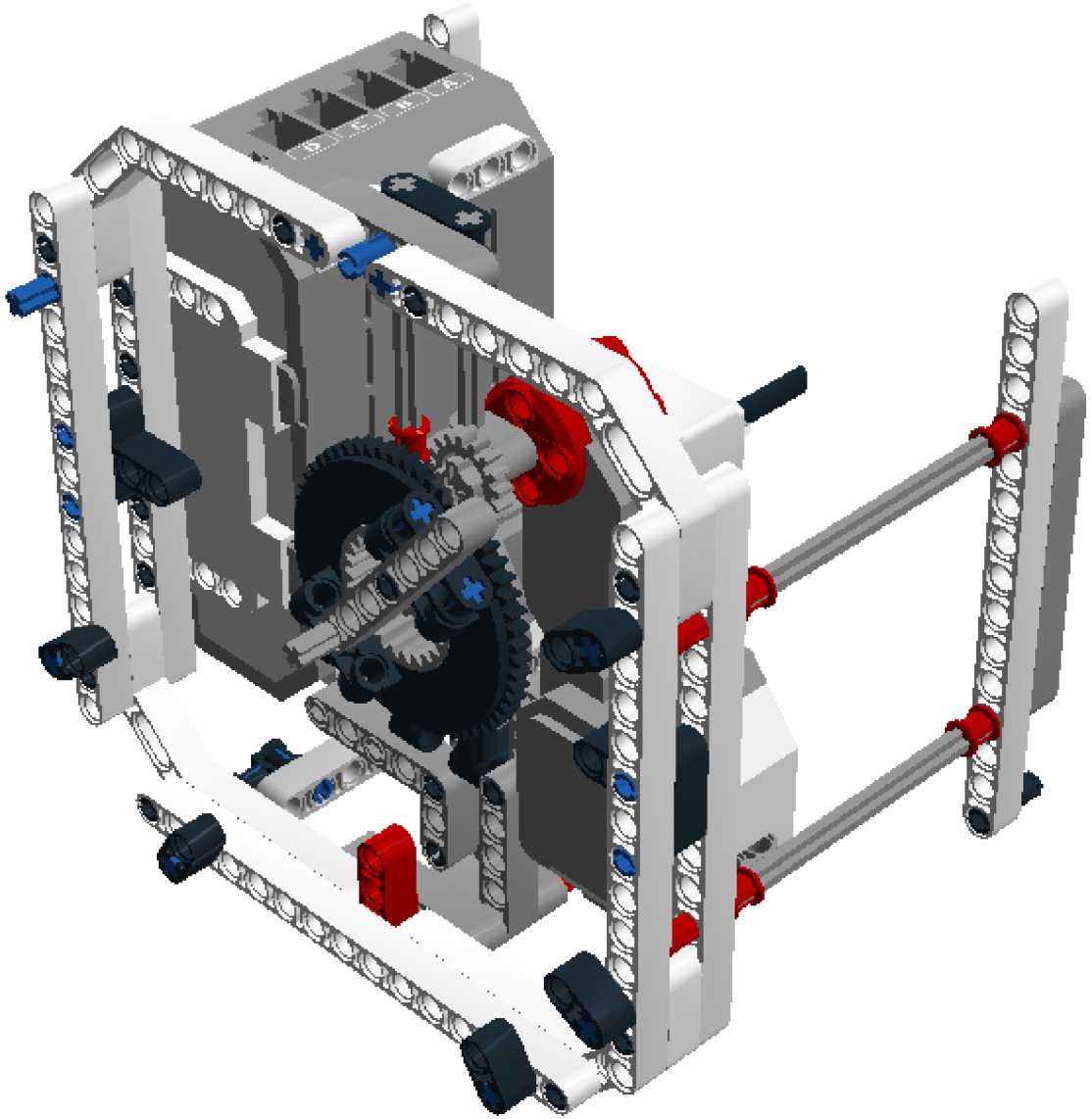

Step 50 of 78

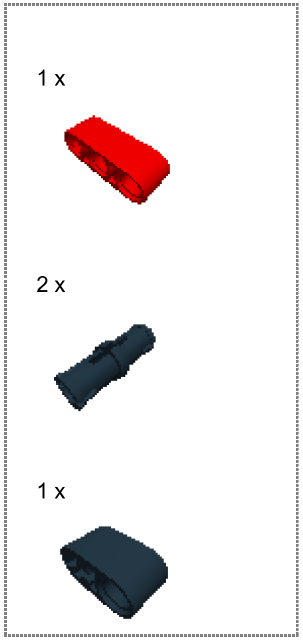

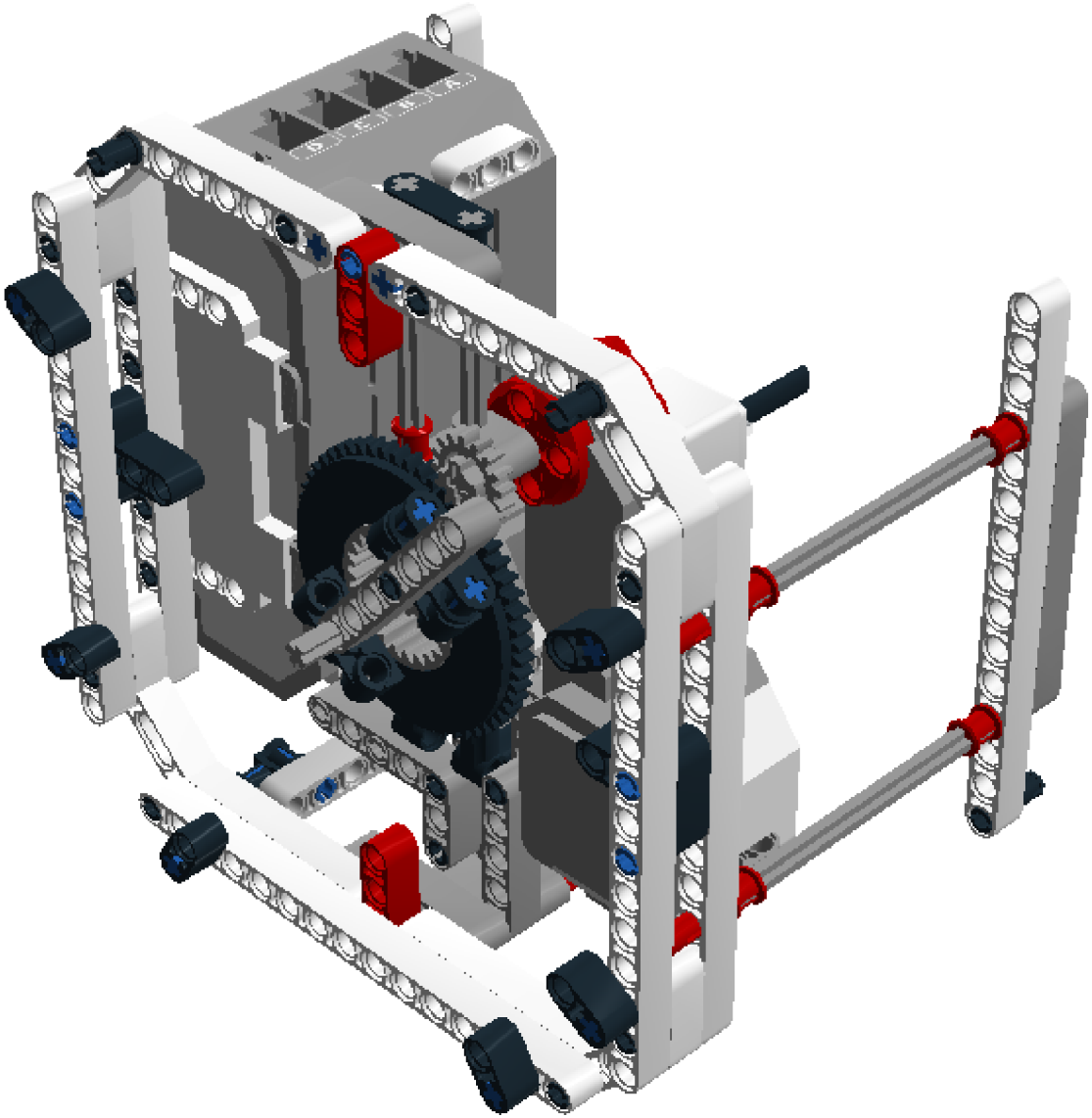

Step 51 of 78

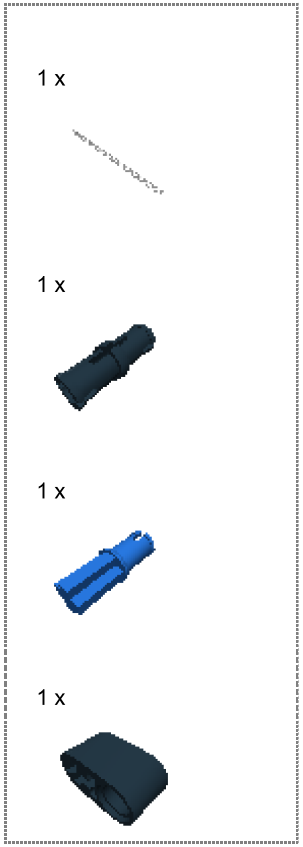

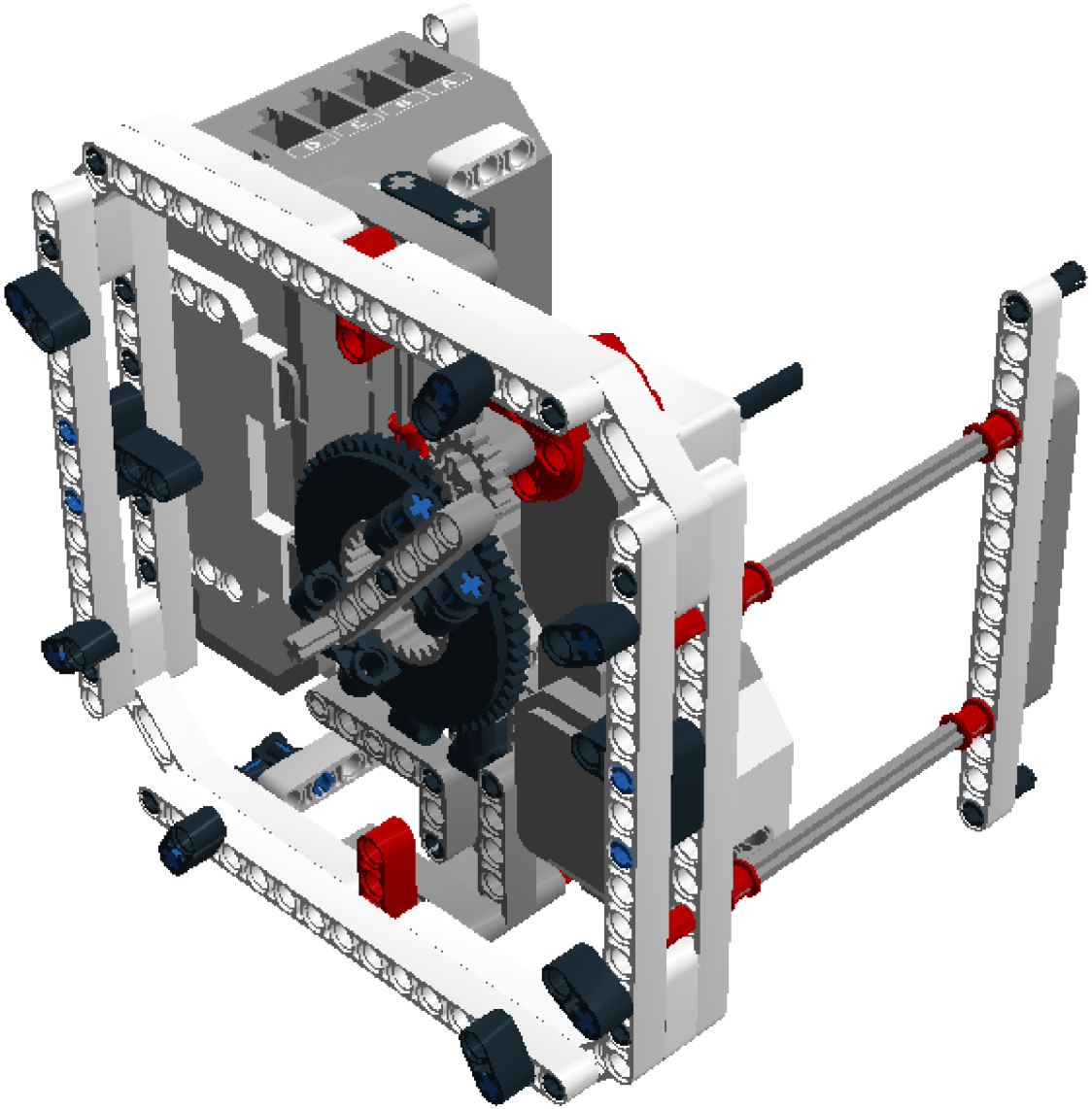

Step 52 of 78

2 x

1 x

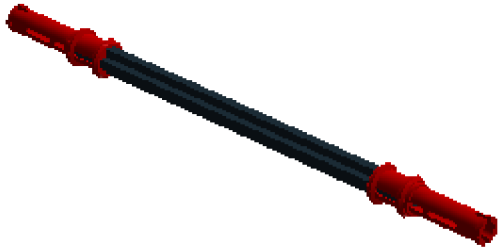

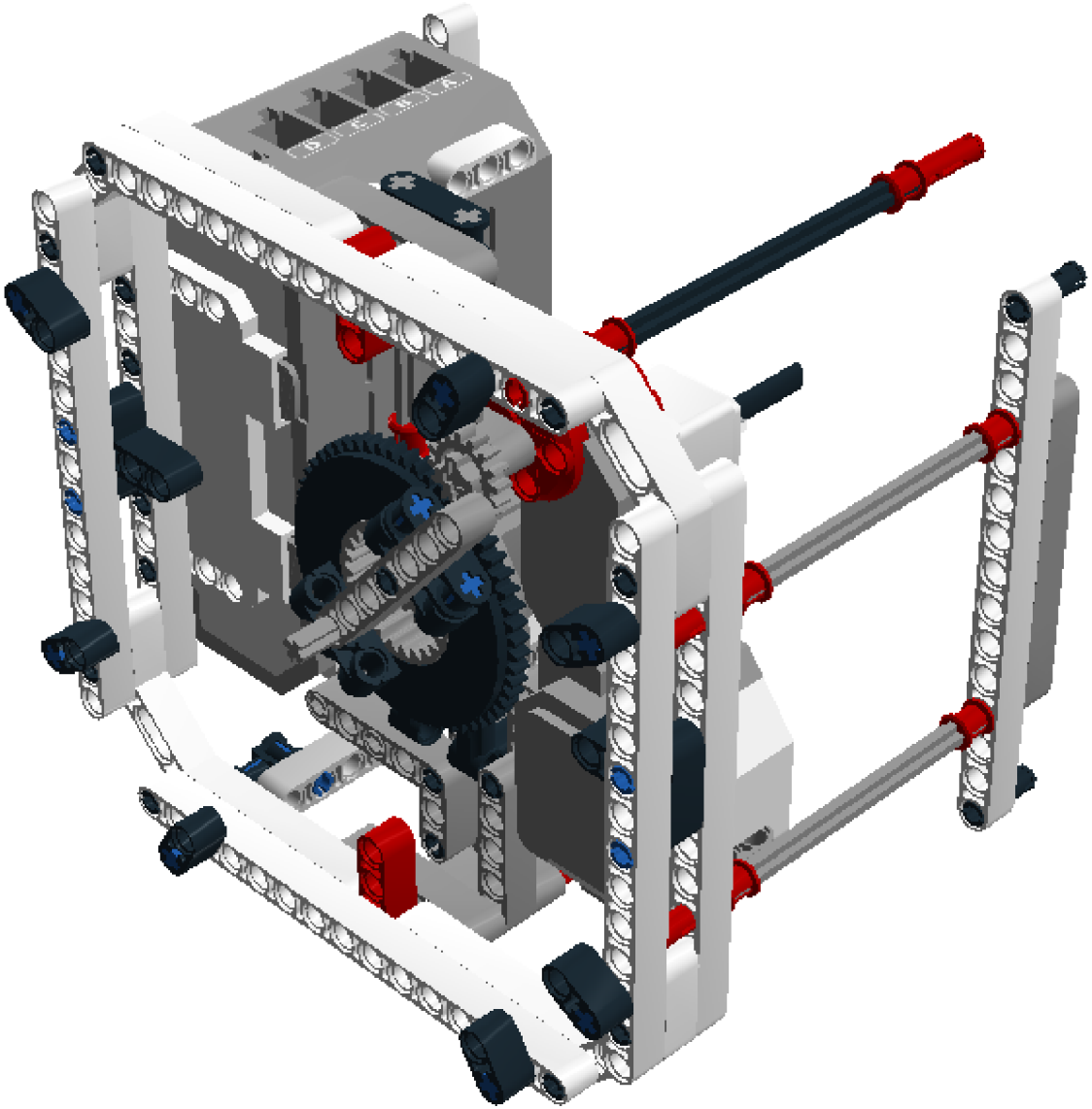

Step 54 of 78

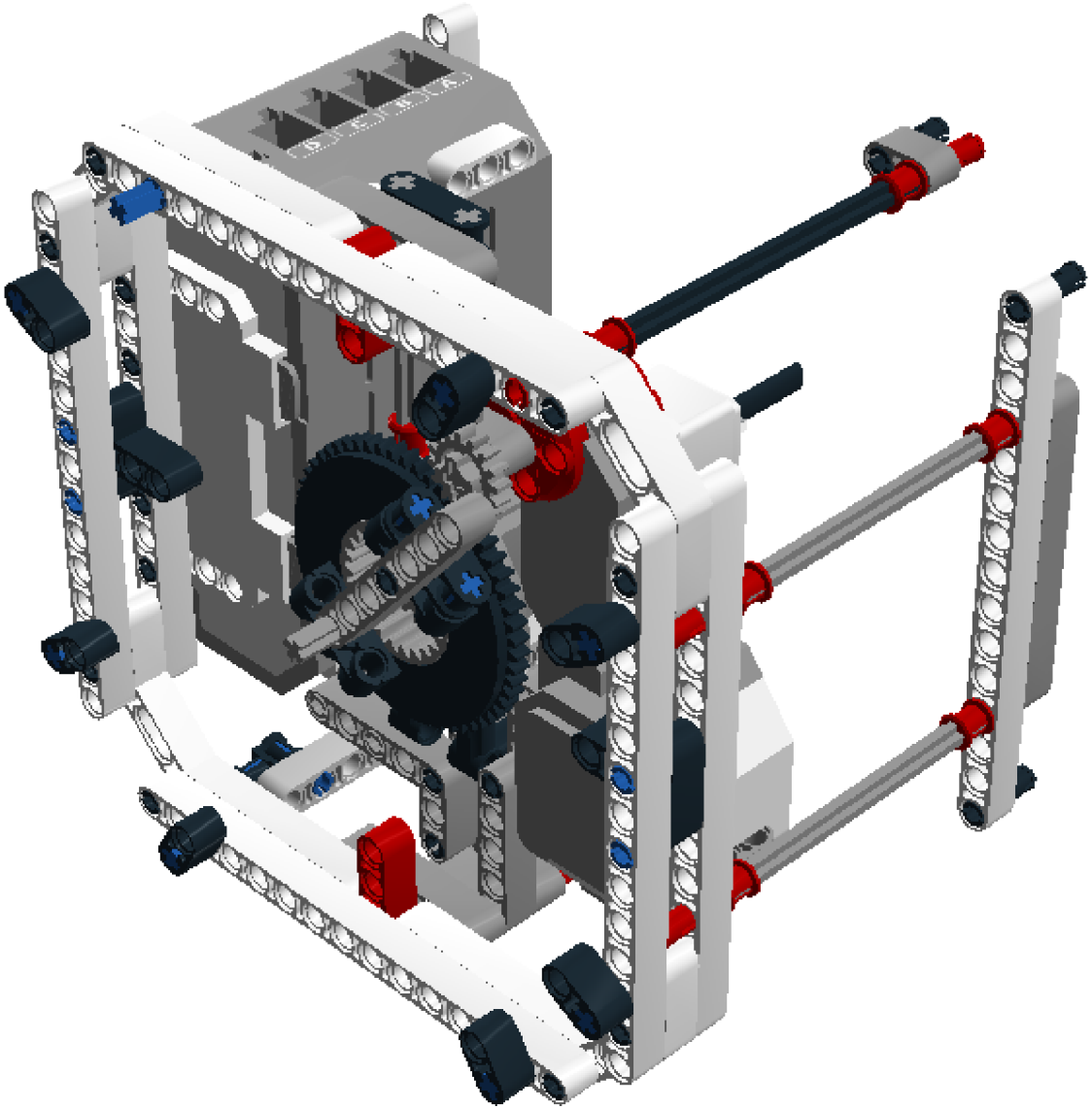

Step 55 of 78

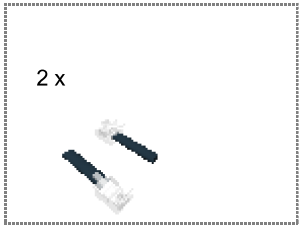

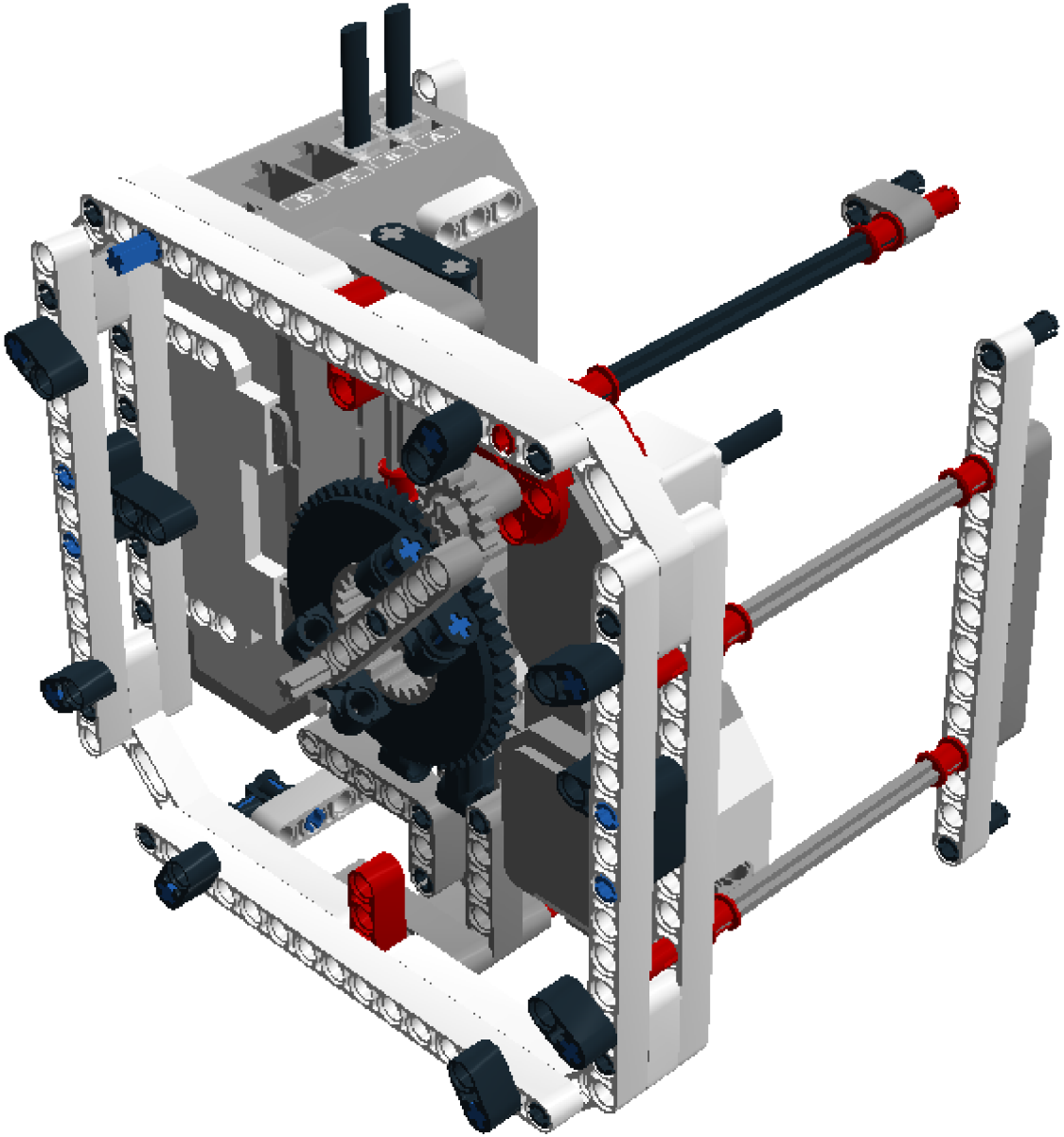

Step 56 of 78

2 x

1 x

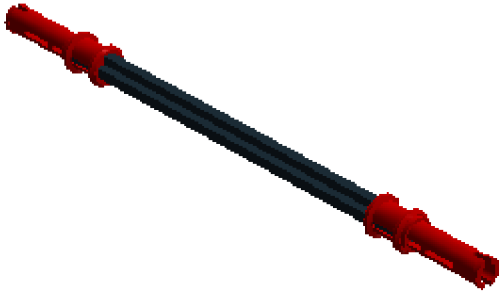

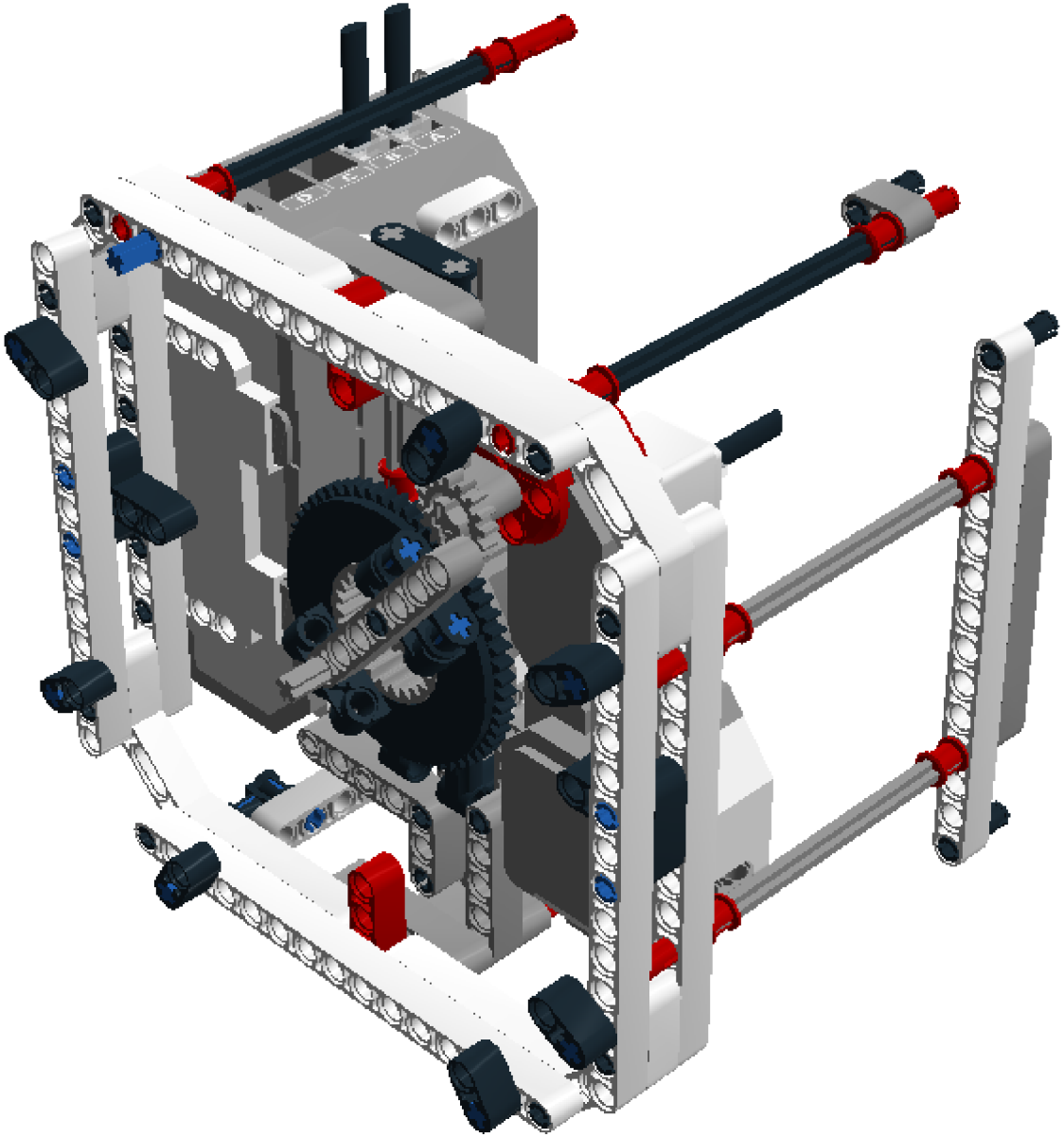

Step 58 of 78

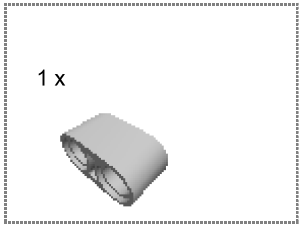

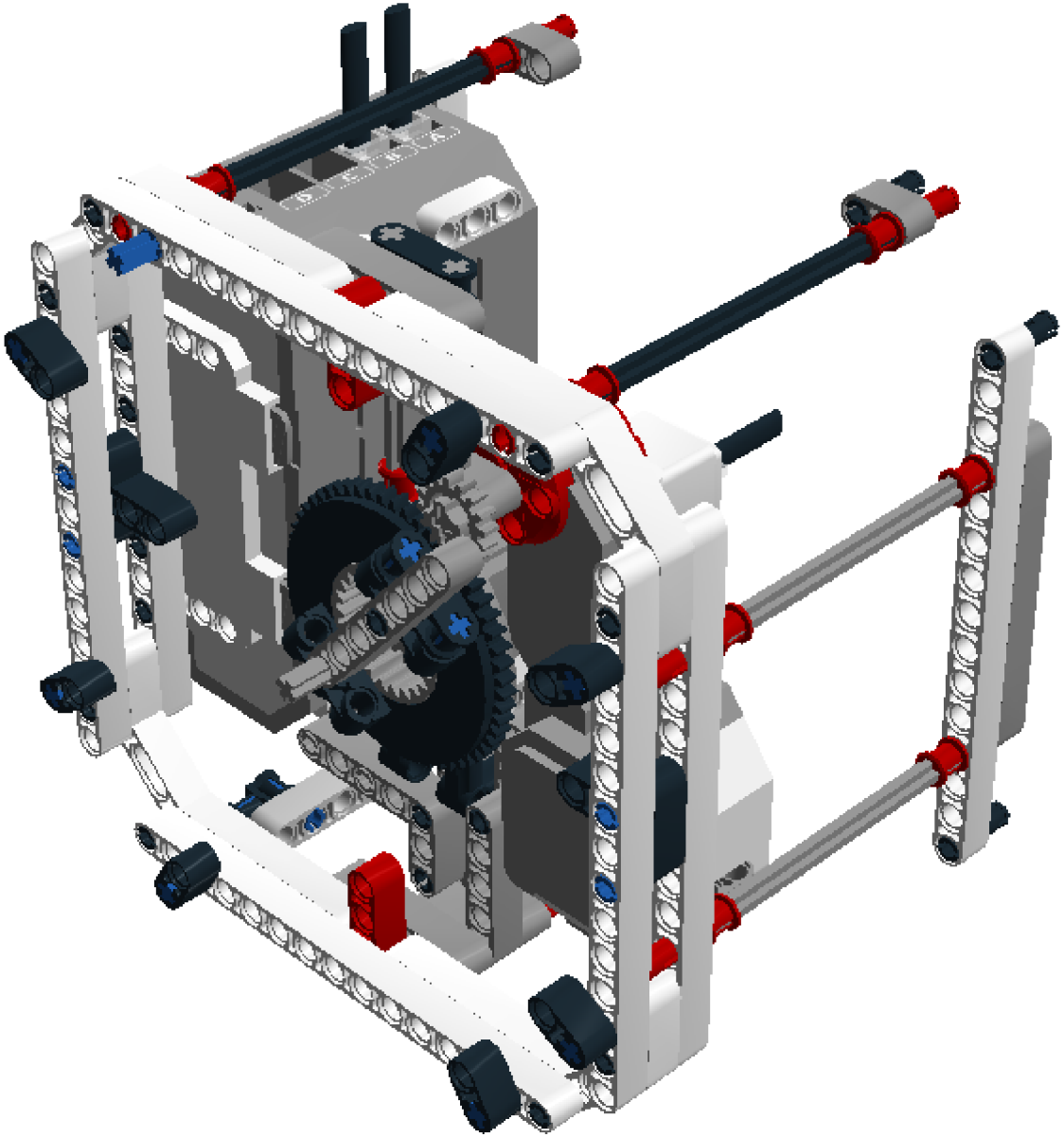

Step 59 of 78

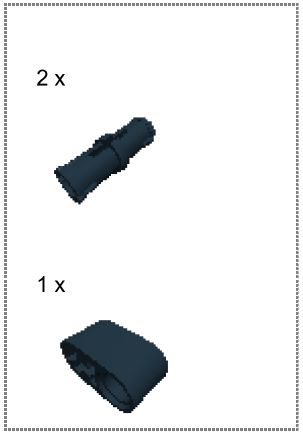

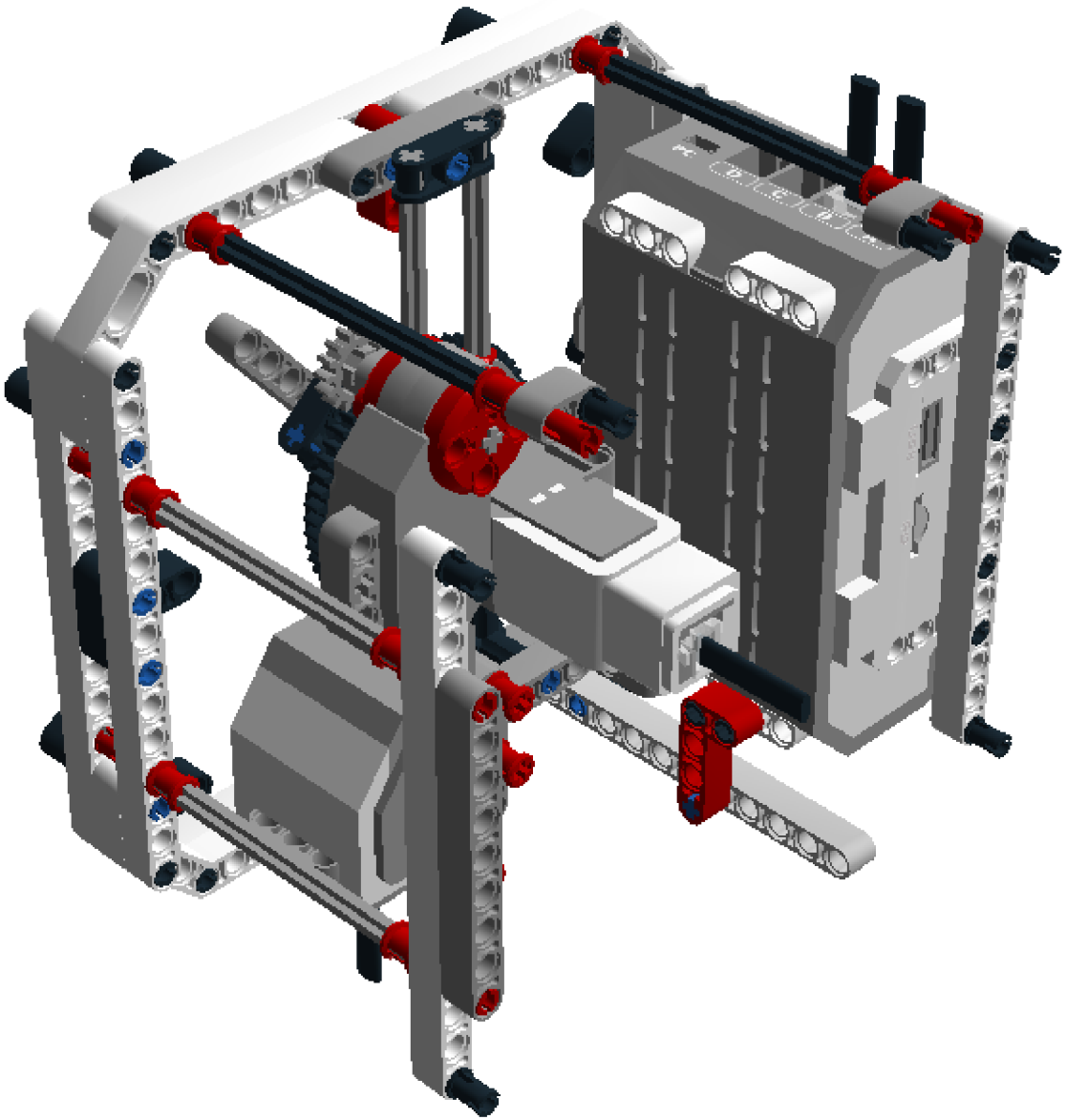

Step 60 of 78

1 x

1 x

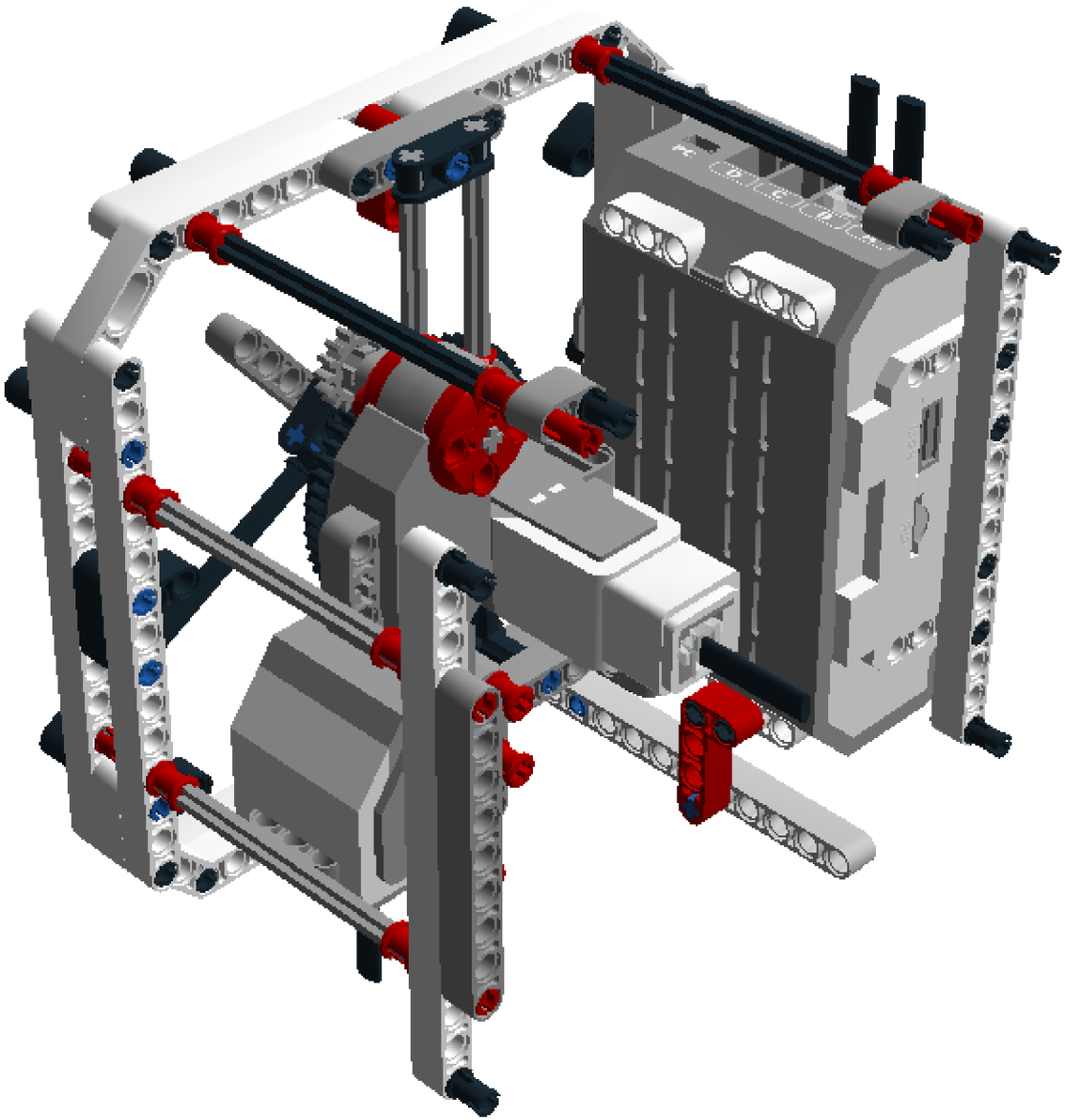

Step 62 of 78

2 x

1 x

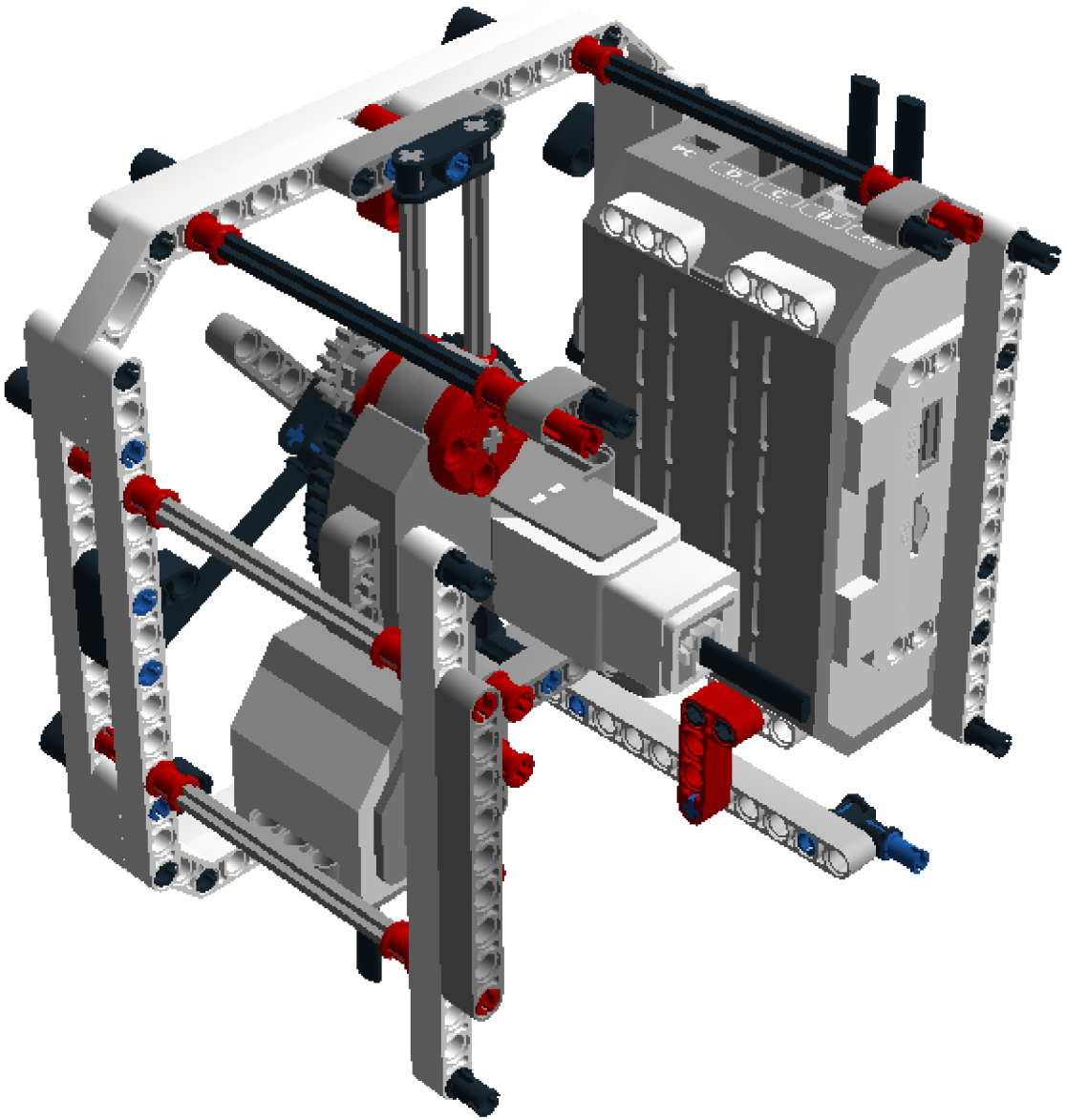

Step 64 of 78

1 x

2 x

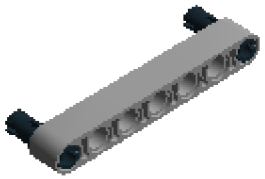

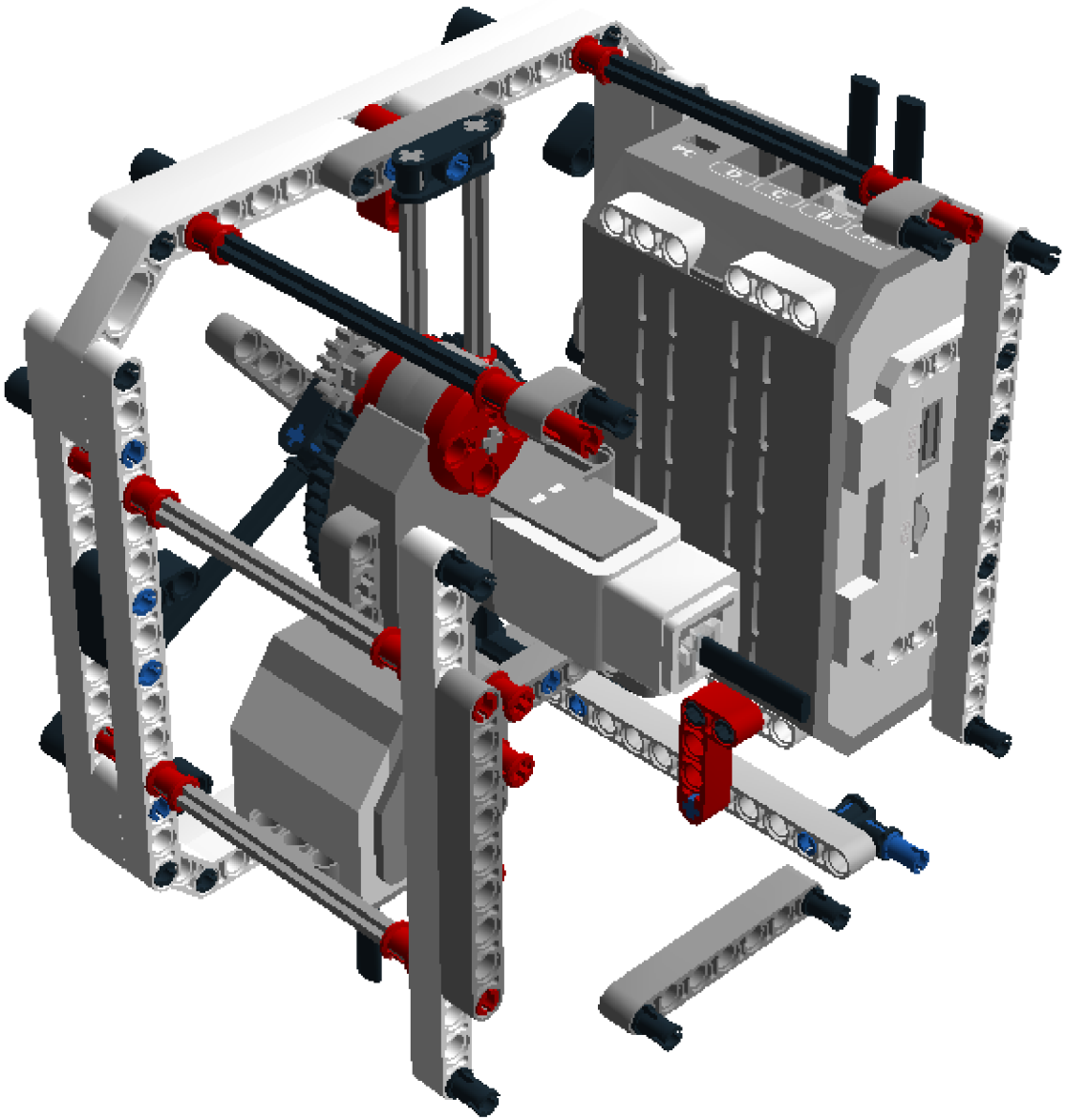

Step 66 of 78

1 x

2 x

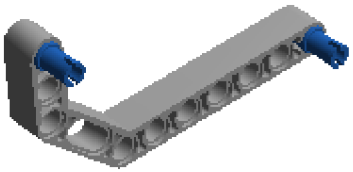

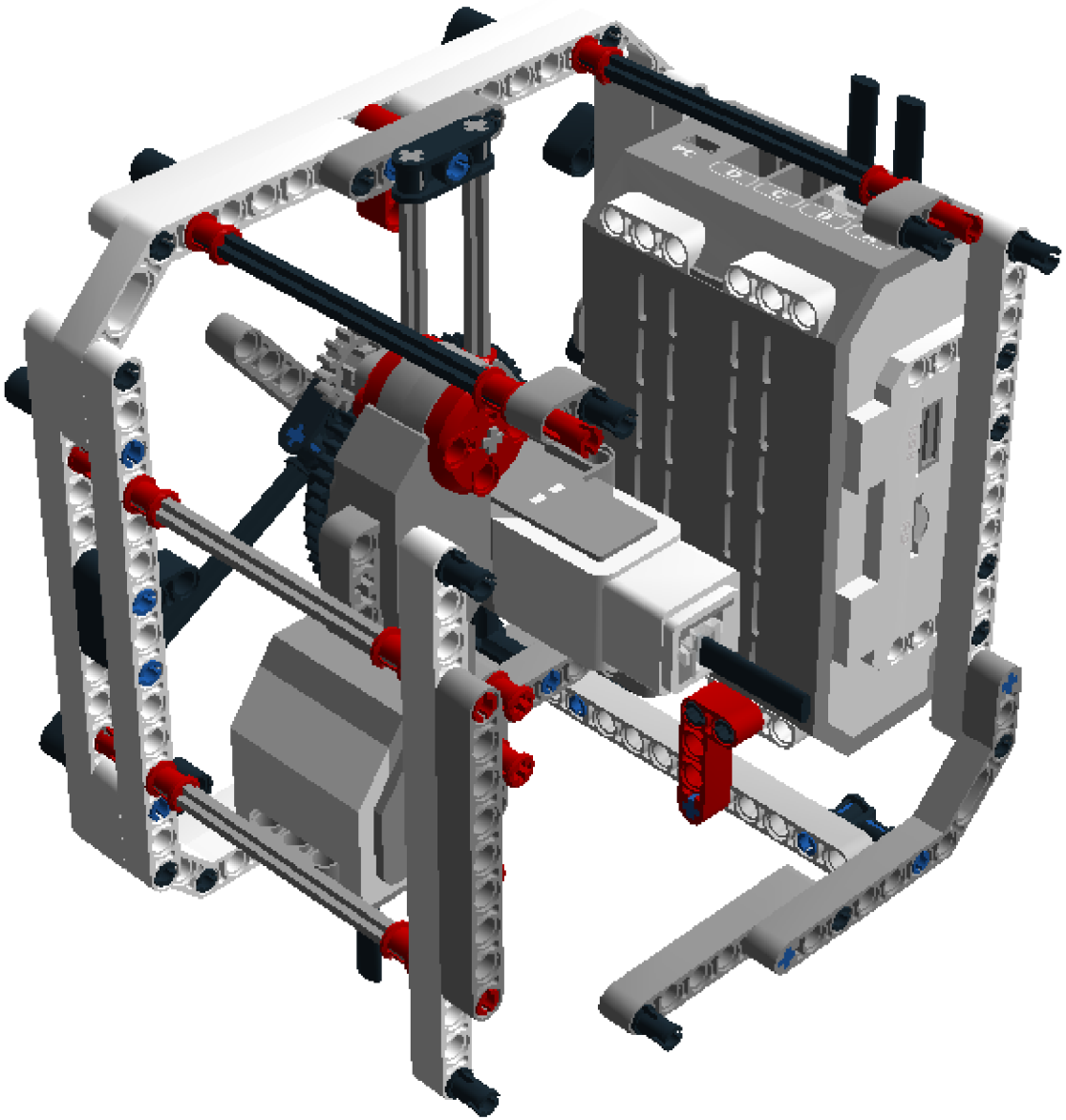

Step 68 of 78

1 x

2 x

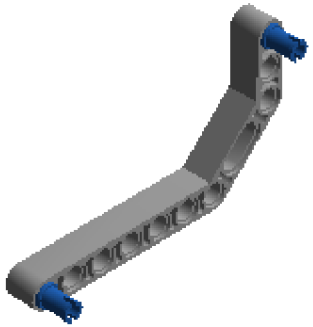

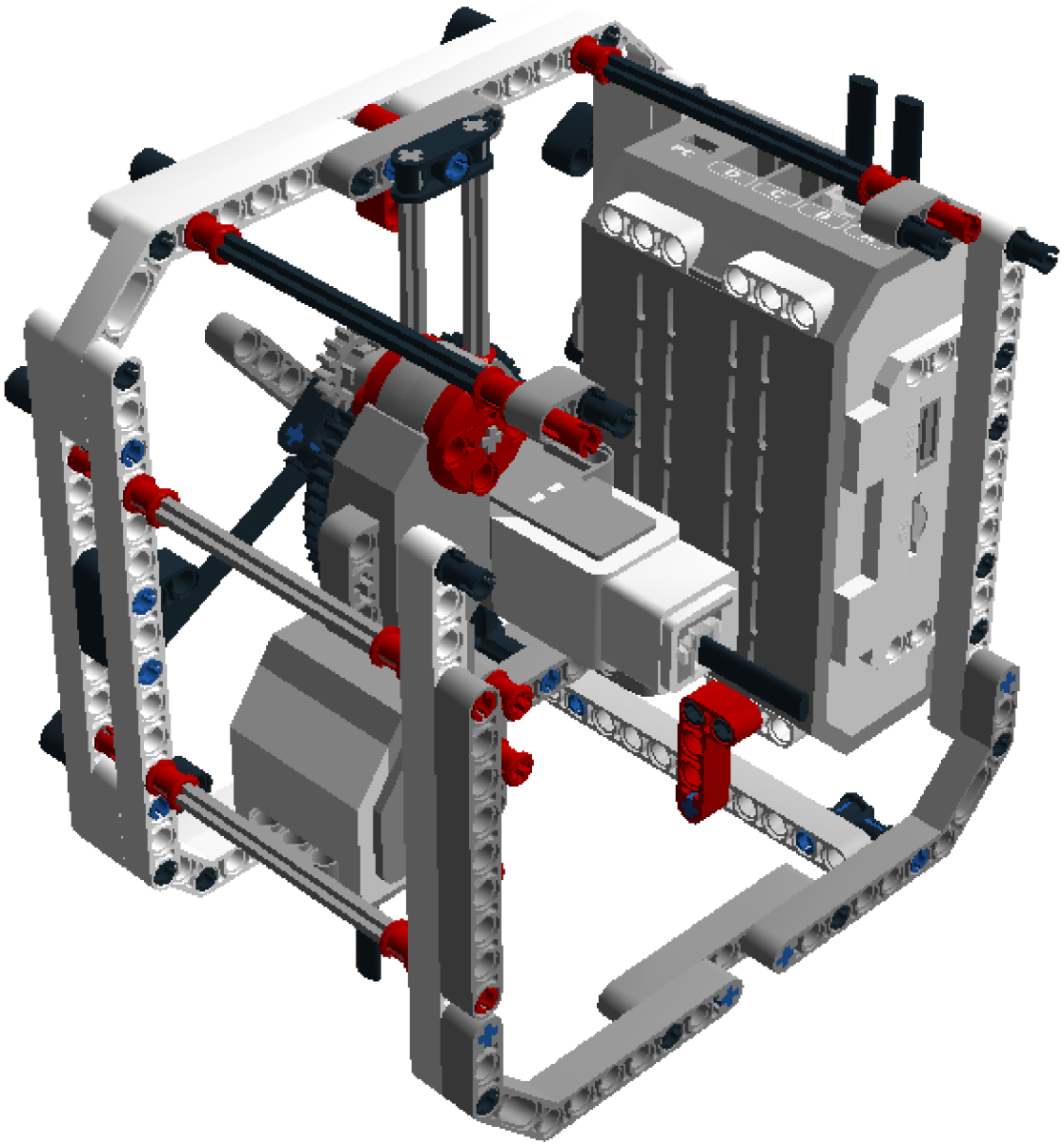

Step 70 of 78

1 x

2 x

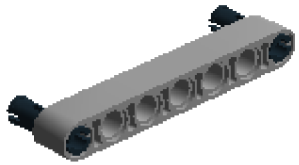

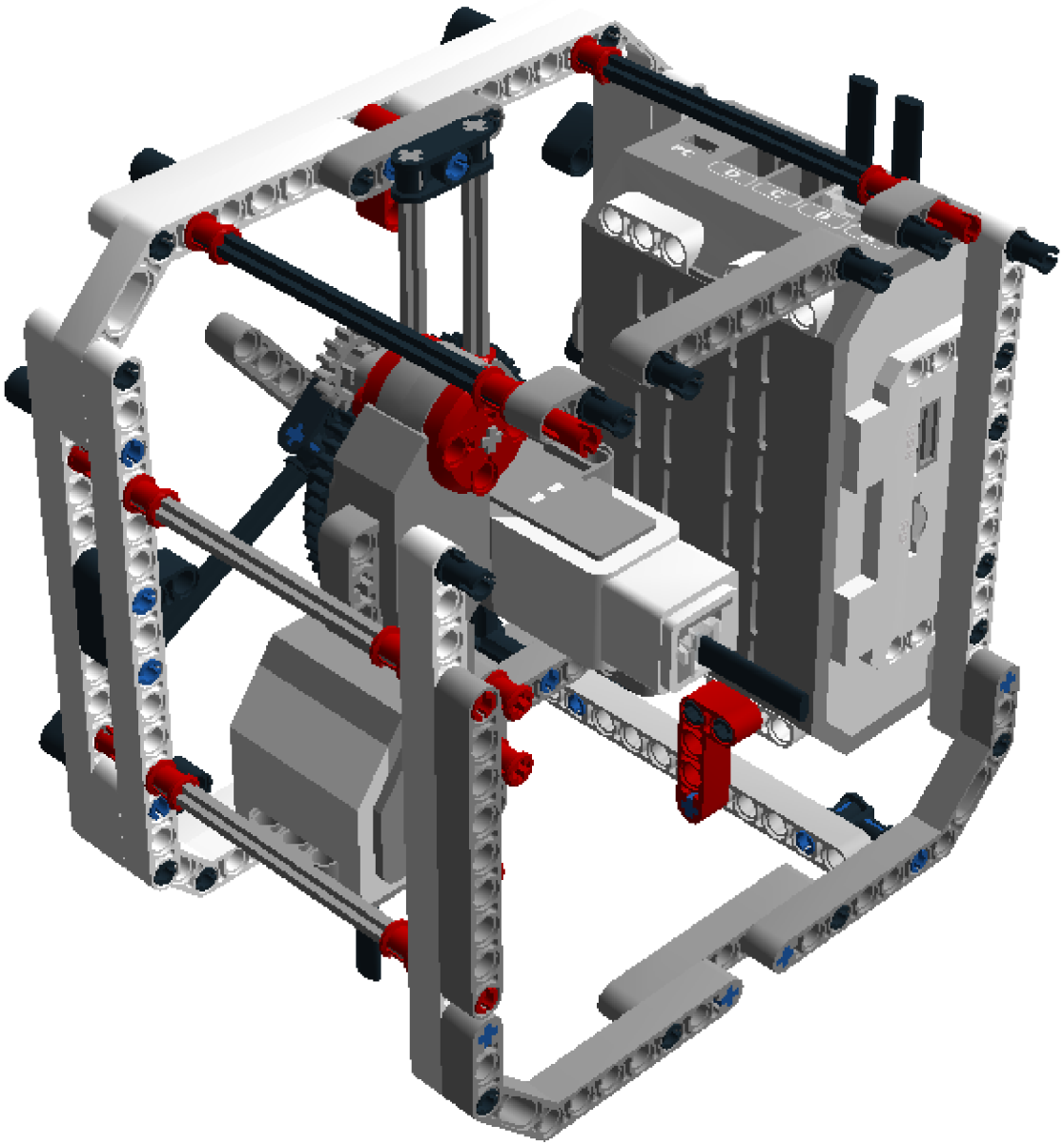

Step 72 of 78

1 x

2 x

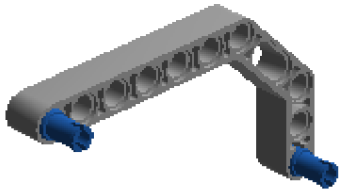

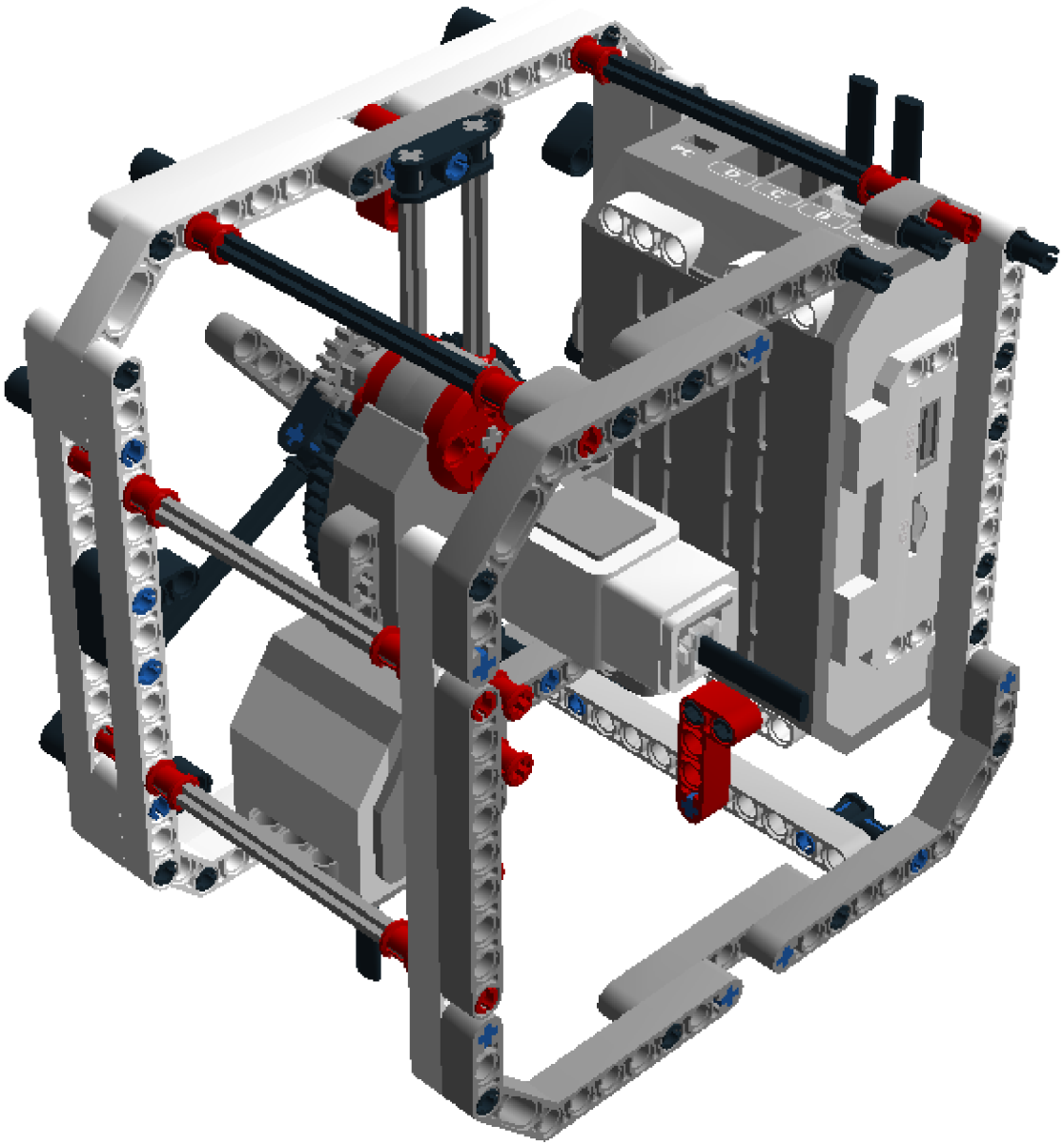

Step 74 of 78

1 x

2 x

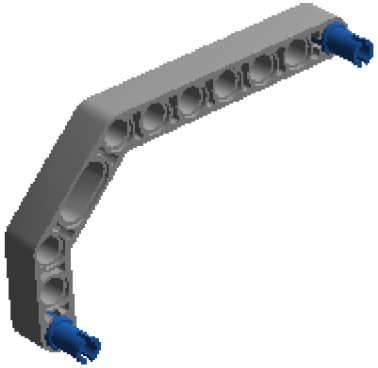

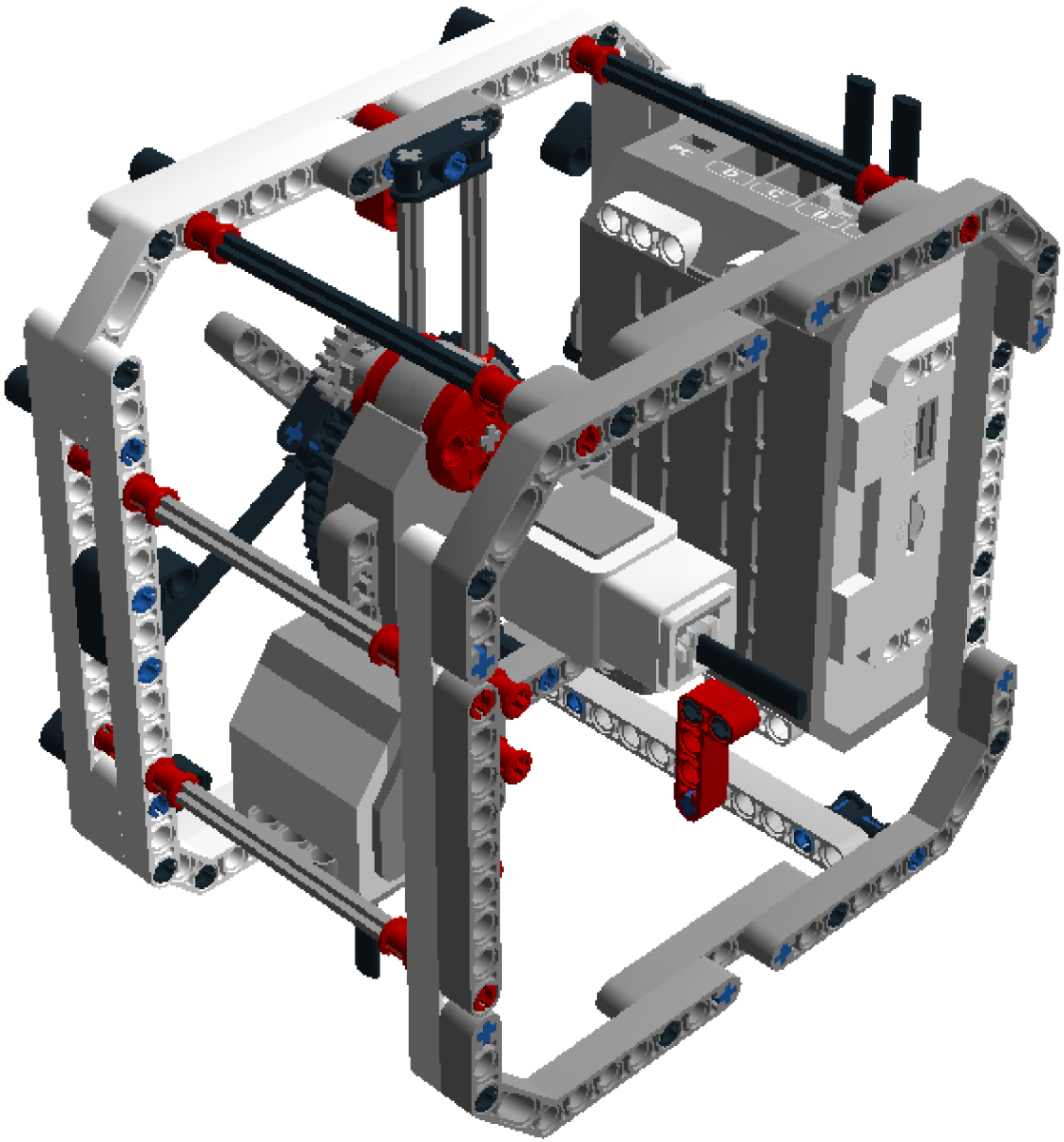

Step 76 of 78

1 x

1 x

1 x

Step 77 of 78

1 x

1 x

1 x

1 x

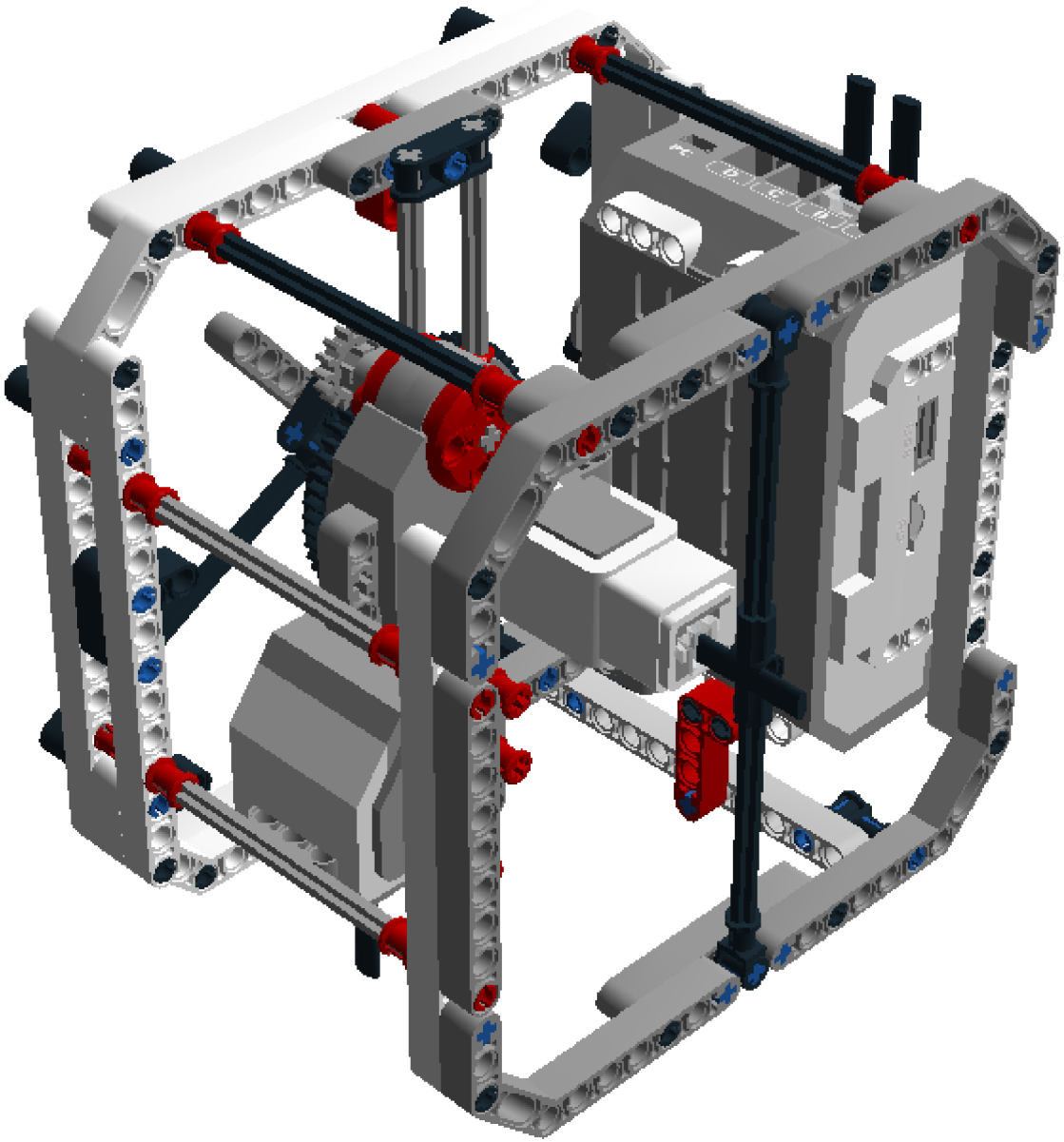

4 x		6024581	CABLE 250 MM - Black,Transparent
1 x		6009996	MS-EV3, P-BRICK - White,Transparent,Medium Stone Grey,Dark Stone Grey,Silver Metallic
2 x		4211651	TECHNIC 5M BEAM - Medium Stone Grey
1 x		4211866	TECHNIC 9M BEAM - Medium Stone Grey
8 x		4542578	TECHNIC 15M BEAM - White
4 x		4495412	DOUBLE ANGULAR BEAM 3X7 45° - White
35 x		4206482	CONN.BUSH W.FRIC./CROSSALE -
1 x	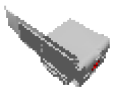	6008577	SMALL MOTOR - White,Bright Red,Medium Stone Grey,Silver Metallic
2 x	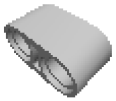	4211862	TECHNIC 2M BEAM - Medium Stone Grey
3 x		4495930	TECHNIC 7M BEAM - Medium Stone Grey
2 x		4552347	T-BEAM 3X3 W/HOLE Ø4.8 - Black
4 x		4211713	TECHNIC ANG. BEAM 3X5 90 DEG. - Medium Stone Grey
2 x		4142865	2M CROSS AXLE W. GROOVE - Bright Red
7 x		4514553	CONNECTOR PEG W. FRICTION 3M - Bright Blue
1 x		6057952	MS 2013 ENGINE - White,Bright Red,Medium Stone Grey
2 x	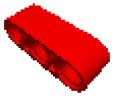	4153718	TECHNIC 3M BEAM - Bright Red
1 x		4141270	TECHNIC ANG. BEAM 4X2 90 DEG - Bright Red
1 x		4297200	TECHNIC 11M BEAM - Light Stone Grey
4 x		4234240	DOUBLE ANGULAR BEAM 3X7 45° - Medium Stone Grey
41 x		4121715	CONNECTOR PEG W. FRICTION - Black
5 x		4107081	CATCH W. CROSS HOLE - Black

Bright Blue

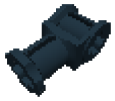

2 x 4211639 CROSS AXLE 5M - Medium Stone Grey

1 x 4211775 CROSS BLOCK 90° - Medium Stone Grey

8 x 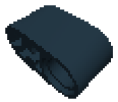 6006140 BEAM 1X2 W/CROSS AND HOLE - Black

15 x 4140806 2M FRIC. SNAP W/CROSS HOLE - Bright Red

2 x 4211805 CROSS AXLE 7M - Medium Stone Grey

2 x 4121667 DOUBLE CROSS BLOCK - Black

3 x 370726 CROSS AXLE 8M - Black

1 x 4107783 ANGLE ELEMENT, 180 DEGREES [2] - Black

2 x 4535768 CROSS AXLE 9M - Medium Stone Grey

2 x 373726 CROSS AXLE 10M - Black

2 x 4107767 ANGLE ELEMENT, 90 DEGREES [6] - Black

1 x 4296059 Angular beam 90degr. w.4 snaps - Medium Stone Grey

1 x 4640536 GEAR WHEEL Z16 - Medium Stone Grey

1 x 4624645 TURNTABLE 4.85 - Black,Medium Stone Grey

© 2012 The LEGO Group. All rights reserved.
Use of the LEGO Digital Designer html print tool, signifies your agreement to the terms of use.